SPRINGVILLE CITY
BARTHOLOMEW WATER TANK
UTAH COUNTY, UTAH
2019

PROJECT NO.	SHEET NO.
1802-207	G-001

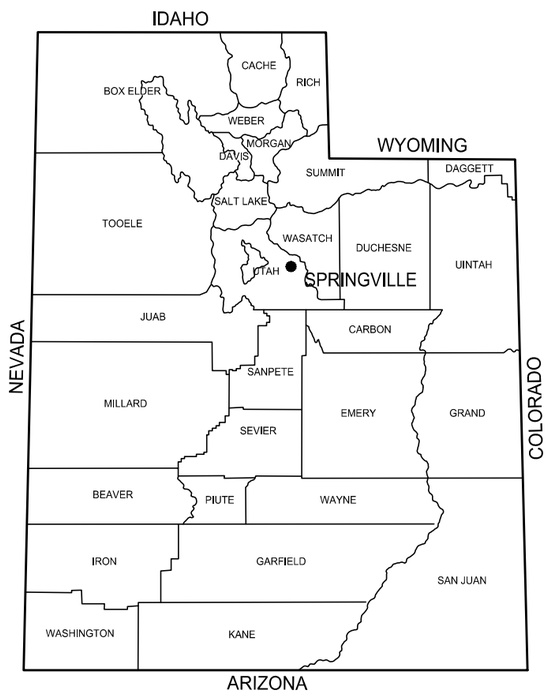

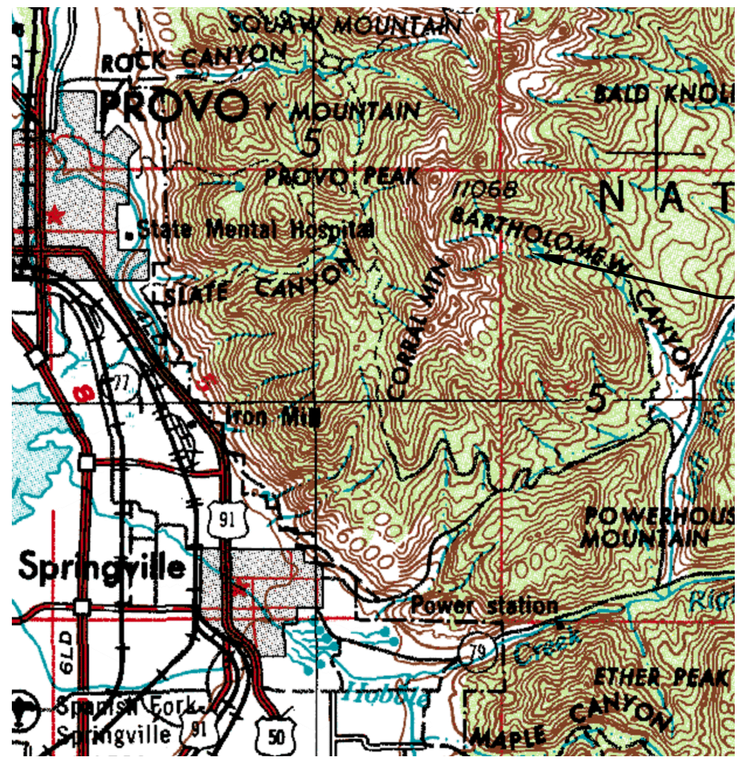

PROJECT LOCATION

VICINITY MAP

APPROVAL

RECOMMENDED FOR APPROVAL:

LICENSED PROFESSIONAL ENGINEER
#8826183-2202
MATTHEW PAUL LAMBERDEAU
08/15/2019
STATE OF UTAH

8/15/2019

ENGINEER DATE

APPROVED:

SPRINGVILLE CITY DATE

Jones & DeMille Engineering, Inc.
CIVIL ENGINEERING - SURVEYING - TESTING
GIS - ENVIRONMENTAL
- infrastructure professionals -
1.800.748.5275 www.jonesanddemille.com

GENERAL
THIS SEAL APPLIES TO ALL
GENERAL SHEETS

CIVIL
THIS SEAL APPLIES TO ALL
CIVIL SHEETS

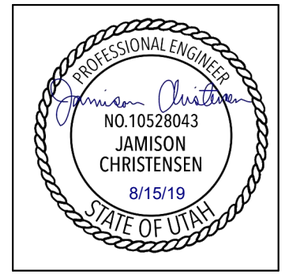

STRUCTURAL
THIS SEAL APPLIES TO ALL
STRUCTURAL SHEETS

SHEET INDEX

SHEET #	SHEET TITLE
1-GENERAL	
G-001	TITLE
G-002	INDEX
G-003	GENERAL NOTES
2-SITE/CIVIL	
C-001	LEGEND
C-101	SITE PIPING PLAN
C-102	SITE DEMOLITION PLAN
C-103	SITE GRADING PLAN
C-501	DETAIL SHEET
C-502	DETAIL SHEET
C-503	DETAIL SHEET
3-STRUCTURAL	
S-001	STRUCTURAL NOTES
S-002	STRUCTURAL NOTES
SA101	FOUNDATION PLAN
SA102	FIELD DRAIN PLAN
SA103	ROOF PLAN
SA301	TANK SECTION
SA302	TANK SECTION
SA501	TANK DETAILS
SA502	TANK DETAILS
SA503	TANK DETAILS
SA504	TANK DETAILS
SA505	TANK DETAILS
SA601	STRUCTURAL SCHEDULES
SA701	STRUCTURAL TYPICAL DETAILS
SA702	STRUCTURAL TYPICAL DETAILS
SB101	WEIR BOX PLANS
SB301	WEIR BOX SECTIONS
SB302	WEIR BOX SECTIONS
SB501	STRUCTURAL DETAILS
SB502	STRUCTURAL DETAILS
SB503	STRUCTURAL DETAILS
4-ELECTRICAL	
E-101	ELECTRICAL LEGEND
E-201	SITE PLAN
E-202	EXISTING CHLORINE BUILDING PLAN
E-203	ENLARGED PLANS
E-301	ELECTRICAL DETAILS

NO.	DATE	REMARKS

REVISIONS

UPDATED: 8/15/2019 9:02:36 AM

DWG NAME: C:\Users\matt.l\Documents\SPRINGVILLE-WATER TANK_matt.l.SS1.dwg

SCALE:

Jones & DeMille Engineering, Inc.
CIVIL ENGINEERING - SURVEYING - TESTING
GIS - ENVIRONMENTAL
1.800.748.5275 www.jonesanddemille.com

APPROVAL RECOMM: PROJECT DESIGN ENGINEER DATE:

APPROVED QUALITY MANAGEMENT REVIEW DATE:

SPRINGVILLE CITY

BARTHOLOMEW WATER TANK

INDEX

PROJECT NUMBER: 1802-207

UTAH
COUNTY

SHEET NO. G-002

GENERAL CONSTRUCTION NOTES:

1. ANY MODIFICATION TO THIS CONSTRUCTION PACKAGE OR TO THE CONSTRUCTION SCHEDULE SHALL BE APPROVED BY THE ENGINEER.
2. THE CONTRACTOR SHALL LOCATE, RETAIN OR PROTECT ALL EXISTING UTILITIES UNLESS OTHERWISE DIRECTED ON THE PLANS OR BY THE PROJECT REPRESENTATIVE. THE CONTRACTOR SHALL NOTIFY THE ENGINEER OR PROJECT REPRESENTATIVE WITH ANY CONFLICTS.
3. ALL SURPLUS EXCAVATION SHALL BE REMOVED FROM THE SITE. TOPSOIL OR OTHER NATIVE MATERIAL MAY BE USED IN LANDSCAPE OR NATIVE GRADING. STOCKPILE TOPSOIL SEPARATELY FROM OTHER EXCAVATED MATERIALS. TOPSOIL PLACED IN LANDSCAPED AREAS SHALL BE 4 INCHES THICK MINIMUM AND GRADED TO DRAIN.
4. THE CONTRACTOR SHALL MAINTAIN 10 FOOT HORIZONTAL AND 18 INCH VERTICAL SEPARATION BETWEEN SANITARY SEWER AND CULINARY WATER LINES.
5. ALL EXISTING UTILITIES ARE SHOWN IN APPROXIMATE LOCATIONS ONLY AND ARE BASED ON UTILITY MAPS AND FIELD SURVEY. CONTRACTOR SHALL NOTIFY BLUE STAKES AT LEAST 48 HOURS IN ADVANCE OF ANY CONSTRUCTION. CONTRACTOR SHALL FIELD VERIFY ALL UTILITY LOCATIONS PRIOR TO CONSTRUCTION.
6. CONTRACTOR SHALL NOTIFY ENGINEER OF ALL UTILITY CONFLICTS UPON DISCOVERY.
7. CONTRACTOR SHALL BE RESPONSIBLE FOR PROPER BACK FILLING, COMPACTING, AND PAVEMENT RESTORATION WITHIN STREET RIGHT-OF-WAY.
8. CONTRACTOR SHALL PROVIDE A CONSTRUCTION SCHEDULE TO ENGINEER AND OWNER.
9. CONTRACTOR TO PROVIDE 48 HR. NOTICE TO RESIDENTS PRIOR TO IMPACTING SERVICE, ACCESS, OR ANY OTHER IMPACTS.
10. CONTRACTOR SHALL BE RESPONSIBLE FOR ALL REQUIRED PERMITS, FEES AND TRAFFIC PLANS FOR CONSTRUCTION.
11. THE CONTRACTOR WILL BE RESPONSIBLE FOR ALL CONSTRUCTION QUALITY CONTROL, TESTING INCLUDING SOILS, BACKFILL CONCRETE, WATERLINE, ETC.
12. CONTRACTOR SHALL REPLACE IN-KIND ALL DISTURBED EXISTING UTILITIES, SIDEWALKS, TREES, LANDSCAPING, IRRIGATION SYSTEM LINES/APPURTENCES, AND WALK PATHWAYS.
13. CONTRACTOR IS REQUIRED TO WORK WITH INDIVIDUAL PROPERTY OWNERS OR BUSINESS FOR ACCESS AND PERMISSION TO CONNECT TO SERVICE AT PROPERTIES. EXISTING METER BOX, YOKE, SETTER, AND METER SHELL BE REMOVED.

PROTECTING AND RELOCATING UTILITIES

1. CONTACT OTHER UTILITY OWNERS WHICH "BLUE STAKES" DOES NOT MARK, TO HAVE THEM LOCATE THEIR FACILITIES.
2. POTHOLE, EXPOSE, OR OTHERWISE LOCATE ALL SUCH FACILITIES AS NECESSARY TO GIVE THE UTILITIES AT LEAST FORTY-EIGHT HOURS NOTICE TO PROTECT OR RELOCATE ALL UTILITY FACILITIES THAT MAY INTERFERE WITH OR BE DAMAGED BY THE CONTRACTORS OPERATIONS. NOTIFY AFFECTED PROPERTY OWNERS IN WRITING AT LEAST 48 HOURS BEFORE INTERRUPTION OF SERVICE.
3. DO NOT INTERRUPT SERVICE UNLESS COORDINATED WITH UTILITY COMPANIES.

CONSTRUCTION STAKING

1. CONTRACTOR WILL BE RESPONSIBLE AT ITS SOLE COST FOR ALL CONSTRUCTION STAKING. CONTRACTOR WILL INSURE THAT ALL CONSTRUCTION IS ACCOMPLISHED IN ACCORDANCE WITH THE DETAILS, LINES, GRADES AND ELEVATIONS PROVIDED BY THE DRAWINGS.

CONSTRUCTION SPECIFICS

1. STAGING AREAS (IF ANY) MUST BE APPROVED BY SPRINGVILLE CITY PRIOR TO CONSTRUCTION. CONTRACTOR TO COORDINATE WITH SPRINGVILLE CITY TO IDENTIFY POTENTIAL USEABLE STAGING AREAS. CONTRACTOR TO RESTORE STAGING AREA TO PRECONSTRUCTION CONDITION.
2. NOTIFY SPRINGVILLE CITY AT LEAST TWO WORKING DAYS PRIOR TO BEGINNING ANY CONSTRUCTION.
3. CONTRACTOR TO PROVIDE DISPOSAL SITE FOR ALL WASTE.
4. A STORM WATER PREVENTION POLLUTION PLAN IS NOT ANTICIPATED BUT WILL BE COMPLETED BY CONTRACTOR IF REQUIRED BY PERMITTING AGENCY.
5. ALL CULINARY WATER CONSTRUCTION SHALL COMPLY WITH SPRINGVILLE CITY STANDARDS AND THESE DOCUMENTS UNLESS DIRECTED OTHERWISE BY SPRINGVILLE CITY.
6. THE EXISTING WATER DISTRIBUTION SYSTEM SHALL REMAIN IN SERVICE DURING CONSTRUCTION UNTIL TIE IN.
7. REFER TO OSHA, AND APWA REQUIREMENTS FOR TRENCH DETAILS.
8. SELECT BEDDING AND BACKFILL IS REQUIRED 6" UNDER, 12" ON SIDES, AND 12" OVER WATERLINE, FITTINGS, AND SERVICES.
9. MINIMUM TRENCH WIDTH SHALL BE EQUAL TO OUTSIDE PIPE DIAMETER PLUS 1 FOOT EACH SIDE OF PIPE. (i.e. 12" PIPE = 3 FOOT WIDTH)
10. THRUST BLOCKS SHALL BE INSTALLED IN ACCORDANCE WITH SPRINGVILLE DRAWING PS-02.
11. CONTRACTORS ARE PROHIBITED FROM OPERATING ANY AND ALL WATER VALVES IN EXISTENCE PRIOR TO COMMENCEMENT OF CONSTRUCTION.
12. A CAP IS REQUIRED ON ALL OPEN-ENDED WATER LINES WHEN UNATTENDED.
13. ALL MATERIAL IN CONTACT WITH DRINKING WATER SHALL BE NSF 61 CERTIFIED.
14. CONTRACTOR TO MAINTAIN ONE LANE OF ACCESS OPEN ON SERVICE ROAD.
15. ALL CONSTRUCTION EQUIPMENT TO BE INSPECTED BY THE FOREST SERVICE BEFORE ALLOWED ON SITE. EQUIPMENT IS TO BE CLEANED OF ALL FOREIGN MATERIAL.
16. EXCESS SOIL MATERIAL MAY BE DISPOSED OF WITHIN ¼ MILE OF SITE.

EROSION CONTROL NOTES

1. AT ALL TIMES DURING CONSTRUCTION, THE CONTRACTOR SHALL BE RESPONSIBLE FOR PREVENTING AND CONTROLLING EROSION DUE TO WIND AND RUNOFF. THE CONTRACTOR SHALL ALSO BE RESPONSIBLE FOR MAINTAINING REQUIRED EROSION CONTROL FACILITIES.
2. ADDITIONAL EROSION CONTROL MEASURES MAY BE REQUIRED DUE TO UNFORSEEN PROBLEMS OR IF THE PLAN DOES NOT FUNCTION AS INTENDED. THE FIELD REPRESENTATIVE MAY REQUIRE ADDITIONAL CONTROL DEVICES UPON INSPECTION OF PROPOSED FACILITIES.
3. THE CONTRACTOR SHALL BE RESPONSIBLE FOR KEEPING THE ROADS CLEAN AND FREE FROM DEBRIS FROM TRAFFIC FROM THE SITE.
4. ALL STORM DRAIN FACILITIES ON SITE AND ADJACENT TO THE SITE NEED TO BE PROTECTED FROM SITE RUNOFF. INLET PROTECTION DEVICES SHALL BE INSTALLED IMMEDIATELY UPON INDIVIDUAL INLETS BECOMING FUNCTIONAL.
5. ALL AREAS DISTURBED DURING CONSTRUCTION SHALL BE SEEDED WITH APPROPRIATE NATIVE SEED MIX OR LANDSCAPED TO MATCH EXISTING.
6. ALL WASH WATER (CONCRETE TRUCKS, VEHICLE CLEANING, ETC.) SHALL BE DISPOSED OF IN A MANNER THAT PREVENTS CONTACT WITH STORM WATER DISCHARGES FROM THE SITE.
7. THE CONTRACTOR SHALL BE RESPONSIBLE FOR ADJUSTING THE EROSION CONTROL MEASURES (SILT FENCES, STRAW BALES, ETC.) DUE TO GRADE CHANGES DURING THE DEVELOPMENT OF THE PROJECT.
8. ALL OFF-SITE CONSTRUCTION SHALL BE STABILIZED AT THE END OF EACH WORKING DAY. THIS INCLUDES BACKFILLING OF TRENCHES FOR UTILITY CONSTRUCTION AND PLACEMENT OF BITUMINOUS PAVING FOR ROAD CONSTRUCTION.
9. ALL MEASURES CONTAINED IN THIS PLAN SHALL BE MAINTAINED IN FULLY FUNCTIONAL CONDITION UNTIL FINAL STABILIZATION OF THE SITE. ALL EROSION AND SEDIMENTATION CONTROL, MEASURES SHALL BE CHECKED BY A QUALIFIED PERSON AT LEAST ONCE EVERY SEVEN CALANDAR DAYS AND WITHIN 24 HOURS OF THE END OF A RAINFALL EVENT. ANY NEEDED CLEANING AND REPAIRS NEED TO BE DONE IMMEDIATELY UPON DISCOVERY.

BACKFILL, COMPACTION AND EMBANKMENT

1. USE ALL MEANS NECESSARY TO PROTECT IMPORTED BACKFILL MATERIAL. BEFORE, DURING AND AFTER INSTALLATION. PROTECT THE INSTALLED WORK AND MATERIALS OF ALL OTHER TRADES.
2. DO NOT STORE CONSTRUCTION MATERIAL ON STREETS ROADS OR HIGHWAYS UNLESS APPROVED BY THE ENGINEER.
3. DO NOT PLACE, SPREAD OR ROLL ANY FILL MATERIAL DURING UNFAVORABLE WEATHER CONDITIONS, DO NOT RESUME OPERATIONS UNTIL MOISTURE CONTENT IS AT +/- 2% OF OPTIMUM OR AS APPROVED BY ENGINEER.
4. PROVIDE BERMS OR CHANNELS AS NECESSARY TO PREVENT FLOODING OR SATURATION OF SUBGRADE. PROMPTLY REMOVE ALL WATER COLLECTING IN DEPRESSIONS BY APPROVED MEANS AS NECESSARY.
5. BEFORE BEGINNING BACKFILLING OPERATIONS OBTAIN APPROVAL FROM ENGINEER.
6. DO NOT PLACE BACKFILL ON FROZEN OR SNOW COVERED GROUND.
7. MAINTAIN MINIMUM COVER OF ONE FOOT OVER PIPE LINES DURING CONSTRUCTION OR AS REQUIRED BY ENGINEER.
8. THE PIPE ZONE IS DEFINED AS THE AREA FROM SIX INCHES BELOW THE BOTTOM OF THE PIPE TO TWELVE INCHES ABOVE THE TOP OF THE PIPE.
9. DO NOT BACKFILL DIRECTLY UPON ANY STRUCTURE OR PIPE.
10. DO NOT BACKFILL THE TRENCH UNTIL THE INSTALLATION HAS BEEN APPROVED BY THE FIELD REPRESENTATIVE.
11. MATERIALS USED FOR BACKFILLING IN BOTH THE PIPE ZONE AND ABOVE THE PIPE ZONE WILL CONFORM TO THE SPECIFICATIONS.

PROJECT CONTACTS

ORGINIZATION	CONTACT	TITLE	PHONE
SPRINGVILLE CITY	BRAD STAPLEY	PUBLIC WORKS DIRECTOR	(801)491-2780
SPRINGVILLE CITY	JEFF ANDERSON	CITY ENGINEER	(801)491-2719
SPRINGVILLE CITY	SHAWN BARKER	WATER SUPERINTENDENT	(801)489-2742
SPRINGVILLE CITY	JAKE NOSTROM	WATER FIELD SUPERVISOR	(801)491-7818
JONES AND DEMILLE ENG.	TED MICKELSEN	PROJECT MANAGER	(801)692-0219
JONES AND DEMILLE ENG.	MATT LAURENDEAU	ASSISTANT PROJECT MANAGER	(901)692-0219
RODCO	ROD ERICKSON	J&DE FIELD REPRESENTATIVE	(801)556-1735
HPE	KIETH HEGERHORST	ELECTRICAL ENGINEER	(801)642-2051

Jones & DeMille Engineering, Inc.
CIVIL ENGINEERING - SURVEYING - TESTING
GIS - ENVIRONMENTAL
1.800.748.5275 www.jonesanddemille.com

NO. DATE REMARKS
REVISIONS

UPDATED: 7/26/2019
PLOTTED: 7/31/2019

DWG NAME: H:\JD\Proj\1802-207\dwg\GN-01.dwg

SCALE: Custom

APPROVAL RECOMM: DATE
PROJECT DESIGN ENGINEER
APPROVED DATE
QUALITY MANAGEMENT REVIEW

SPRINGVILLE CITY
BARTHOLOMEW WATER TANK
GENERAL NOTES
PROJECT NUMBER: 1802-207

UTAH
COUNTY

SHEET NO. G-003

LEGEND

EXISTING FEATURES

- SANITARY SEWER LINE (swr)
- SANITARY SEWER MANHOLE (SMH)
- CULINARY WATER LINE (wtr)
- CULINARY WATER VALVE
- BURIED POWER LINE (be)
- OVERHEAD POWER LINE (e)
- BURIED TELEPHONE LINE (btel)
- OVERHEAD TELEPHONE LINE (tel)
- BURIED CABLE TV LINE (bctv)
- OVERHEAD CABLE TV LINE (ctv)
- FIBER OPTIC LINE (fo)
- NATURAL GAS LINE (gas)
- IRRIGATION LINE (ir)
- STORM DRAIN (sd)
- FENCE LINE (BARBED OR STOCKTIGHT)
- FENCE LINE (CHAIN LINK)
- DRAINAGE CULVERT
- CONCRETE SURFACING (SIDEWALK, CURB, GUTTER, ETC.)
- FLOW LINE OF DITCH
- EDGE OF ASPHALT SURFACING
- EDGE OF GRAVEL SURFACING
- EDGE OF DIRT SURFACING
- FIRE HYDRANT
- WATER METER
- STRUCTURE
- POWER POLE & GUY WIRE (G.W., EPP)
- TREE
- DELINEATOR POST
- STREET SIGN
- TELEPHONE PEDESTAL
- MAILBOX

MISC. FEATURES

- SUBDIVISION BOUNDARY LINE
- LOT LINES
- EXISTING RIGHT OF WAY LINE (r/w)
- EXISTING N/A LINE
- EXISTING CITY BLOCK LINES (r/w, BLOCK LINE)
- PROPOSED RIGHT-OF-WAY LINE (R/W)
- SECTION LINE
- QUARTER SECTION LINE
- (P.U.E.) PUBLIC UTILITY EASEMENT
- DEED LINE
- PROPERTY LINE

ABBREVIATIONS

TBC	TOP BACK OF CURB	EPP	POWER POLE
FLG	FLOW LINE OF GUTTER	SMH	SEWER MANHOLE
LOC	LIP OF CURB	CMH	COMMUNICATION MANHOLE
TSW	TOP OF SIDEWALK	R/W	RIGHT-OF-WAY
TOC	TOP OF CONCRETE	T.C.E.	TEMPORARY CONSTRUCTION EASEMENT
EOA	EDGE OF ASPHALT		
TOA	TOP OF ASPHALT	P.U.E.	PUBLIC UTILITY EASEMENT
TOG	TOP OF GRATE		
FLC	FLOW LINE OF CULVERT	STA	STATION
SW	SIDEWALK	L / LT	LEFT
FG	FINISHED GROUND	R / RT	RIGHT

PROPOSED FEATURES

- SANITARY SEWER LINE (SWR)
- SANITARY SEWER MANHOLE (SMH)
- SANITARY SEWER SERVICE
- CULINARY WATER LINE (WTR)
- CULINARY WATER VALVE
- BURIED POWER LINE (BE)
- OVERHEAD POWER LINE (E)
- BURIED TELEPHONE LINE (BTEL)
- OVERHEAD TELEPHONE LINE (TEL)
- BURIED CABLE TV LINE (BCTV)
- OVERHEAD CABLE TV LINE (CTV)
- FIBER OPTIC LINE (FO)
- NATURAL GAS LINE (GAS)
- IRRIGATION LINE (IR)
- STORM DRAIN (SD)
- FENCE LINE (BARBED OR STOCKTIGHT)
- FENCE LINE (CHAIN LINK)
- DRAINAGE CULVERT
- EDGE OF ASPHALT
- EDGE OF CONCRETE
- FIRE HYDRANT
- CULINARY WATER METER
- DELINEATOR POST
- STREET SIGN
- POWER POLE
- MAILBOX
- CONCRETE SURFACING
- ASPHALT SURFACING
- TOP OF CUT LIMITS (CUT)
- TOE OF FILL LIMITS (FILL)

NO.	DATE	REMARKS

REVISIONS

UPDATED: 7/26/2019
PLOTTED: 7/31/2019

DWG NAME: H:\JD\Proj\1802-207\dwg\TITLE.dwg

SCALE: NONE

Jones & DeMille Engineering, Inc.
CIVIL ENGINEERING - SURVEYING - TESTING
GIS - ENVIRONMENTAL
1.800.748.5275 www.jonesanddemille.com

APPROVAL RECOMM: PROJECT DESIGN ENGINEER — DATE
APPROVED: QUALITY MANAGEMENT REVIEW — DATE

SPRINGVILLE CITY
BARTHOLOMEW WATER TANK
LEGEND

PROJECT NUMBER: 1802-207

UTAH
COUNTY

SHEET NO. C-001

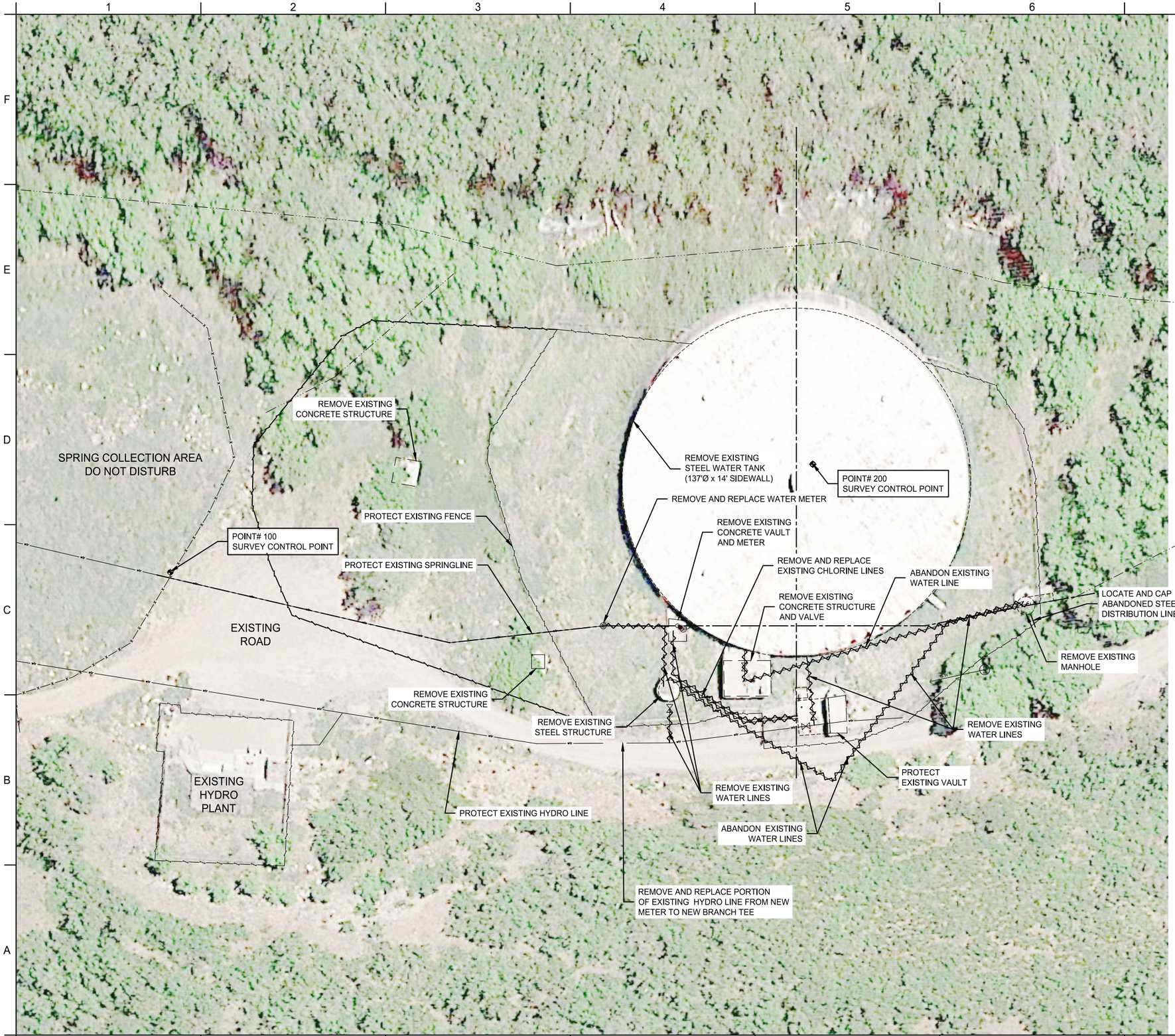

Know what's below. Call 811 before you dig.
BLUE STAKES OF UTAH
UTILITY NOTIFICATION CENTER, INC.
www.bluestakes.org
1-800-662-4111

NO.	DATE	REMARKS

REVISIONS

UPDATED:
PLOTTED:

DWG NAME:

SCALE: 1" = 40'

Jones & DeMille Engineering, Inc.
CIVIL ENGINEERING - SURVEYING - TESTING
GIS - ENVIRONMENTAL
1.800.748.5275 www.jonesanddemille.com

APPROVAL RECOMM: PROJECT DESIGN ENGINEER DATE

APPROVED QUALITY MANAGEMENT REVIEW DATE

SPRINGVILLE CITY

BARTHOLOMEW WATER TANK

SITE DEMOLITION PLAN

PROJECT NUMBER: 1802-207

UTAH
COUNTY

SHEET NO. C-101

POINT #	NORTHING	EASTING	ELEVATION	LATTITUDE	LONGITUDE	DESCRIPTION
100	252361.64	638771.89	6253.51	40°13'19.73687"	111°30'29.12260"	CP-TANK1 rebar with cap stamped "SURVEY CONTROL"
200	252106.01	638814.87	6219.22			CENTER OF TANK

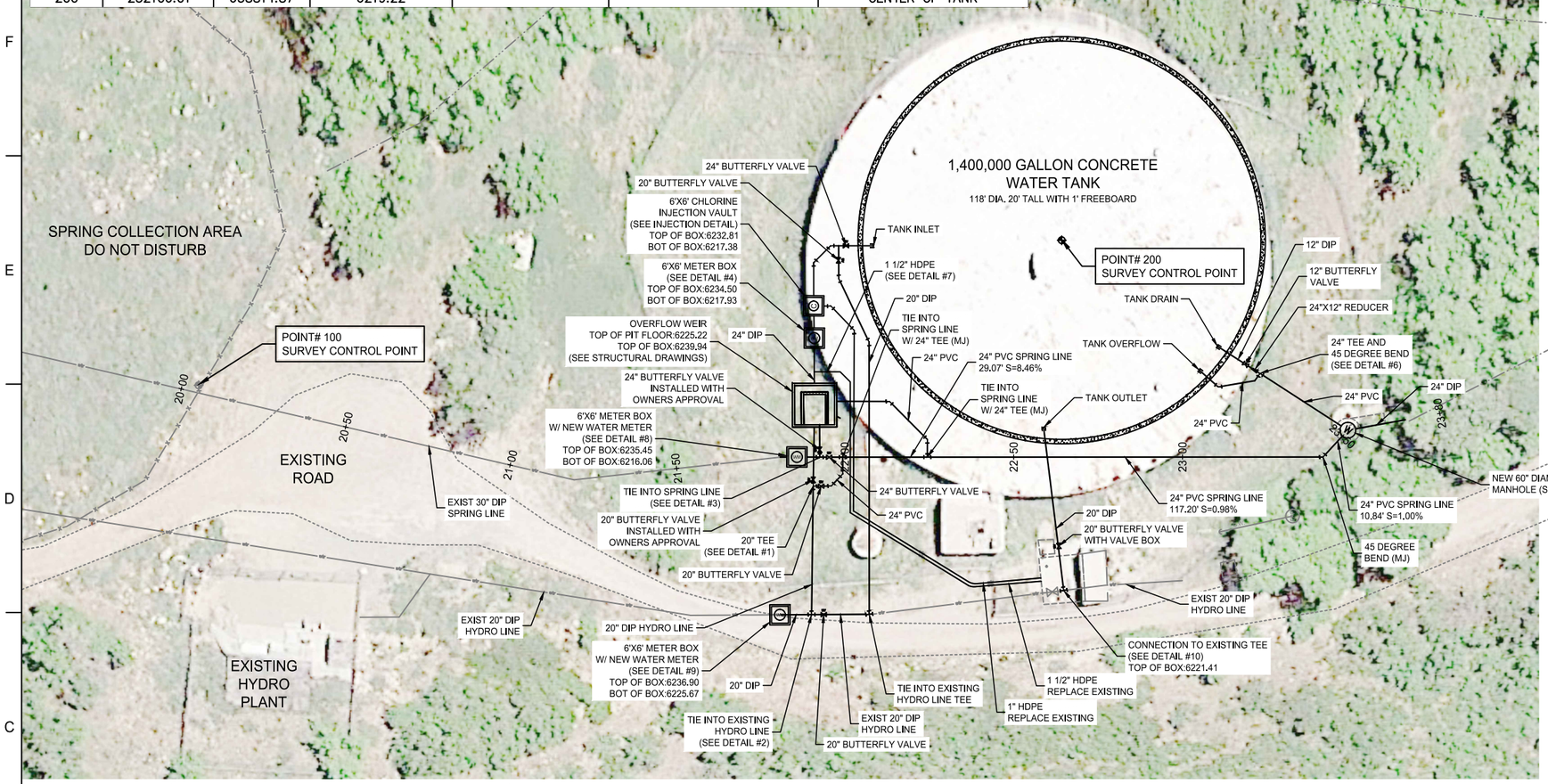

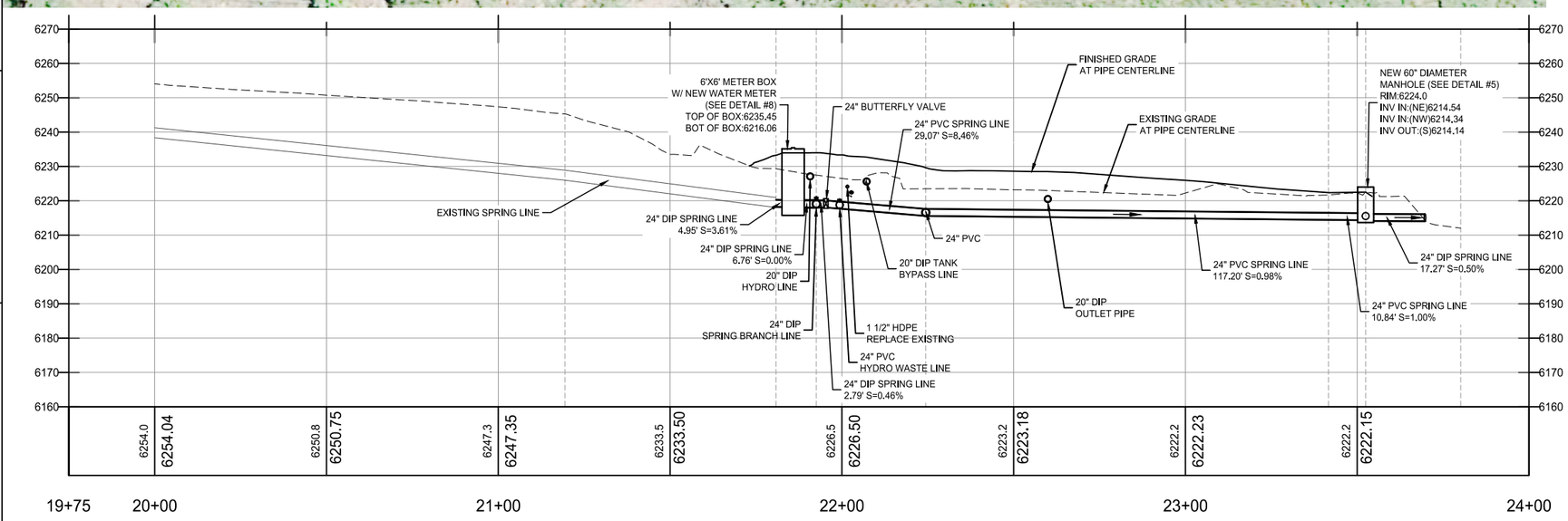

NOTES:

1. INSTALL VALVE BOX WITH VALVES NOT INSTALLED IN VAULT.
2. CONTRACTOR TO VERIFY EXISTING PIPING DEPTH TO CONFIRM VAULT DEPTHS.

SCALE: HORIZ=1"=40'
VERT=1"=40'

Know what's below. Call 811 before you dig.
BLUE STAKES OF UTAH
UTILITY NOTIFICATION CENTER, INC.
www.bluestakes.org
1-800-662-4111

Jones & DeMille Engineering, Inc.
CIVIL ENGINEERING - SURVEYING - TESTING
GIS - ENVIRONMENTAL
1.800.748.5275 www.jonesanddemille.com

NO. DATE REMARKS

REVISIONS

UPDATED:
PLOTTED:

DWG NAME:

SCALE: 1" = 40'

APPROVAL RECOMM: PROJECT DESIGN ENGINEER DATE

APPROVED QUALITY MANAGEMENT REVIEW DATE

SPRINGVILLE CITY

BARTHOLOMEW WATER TANK

SITE PIPING PLAN

PROJECT NUMBER: 1802-207

UTAH
COUNTY

SHEET NO. C-102

Bartholomew Canyon Seed Mixture

Replant vegitation after final grading

Scientific Name	lbs/acre
Bromus marginatus	4
Bouteloua curtipendula	3
Penstemon strictus	2

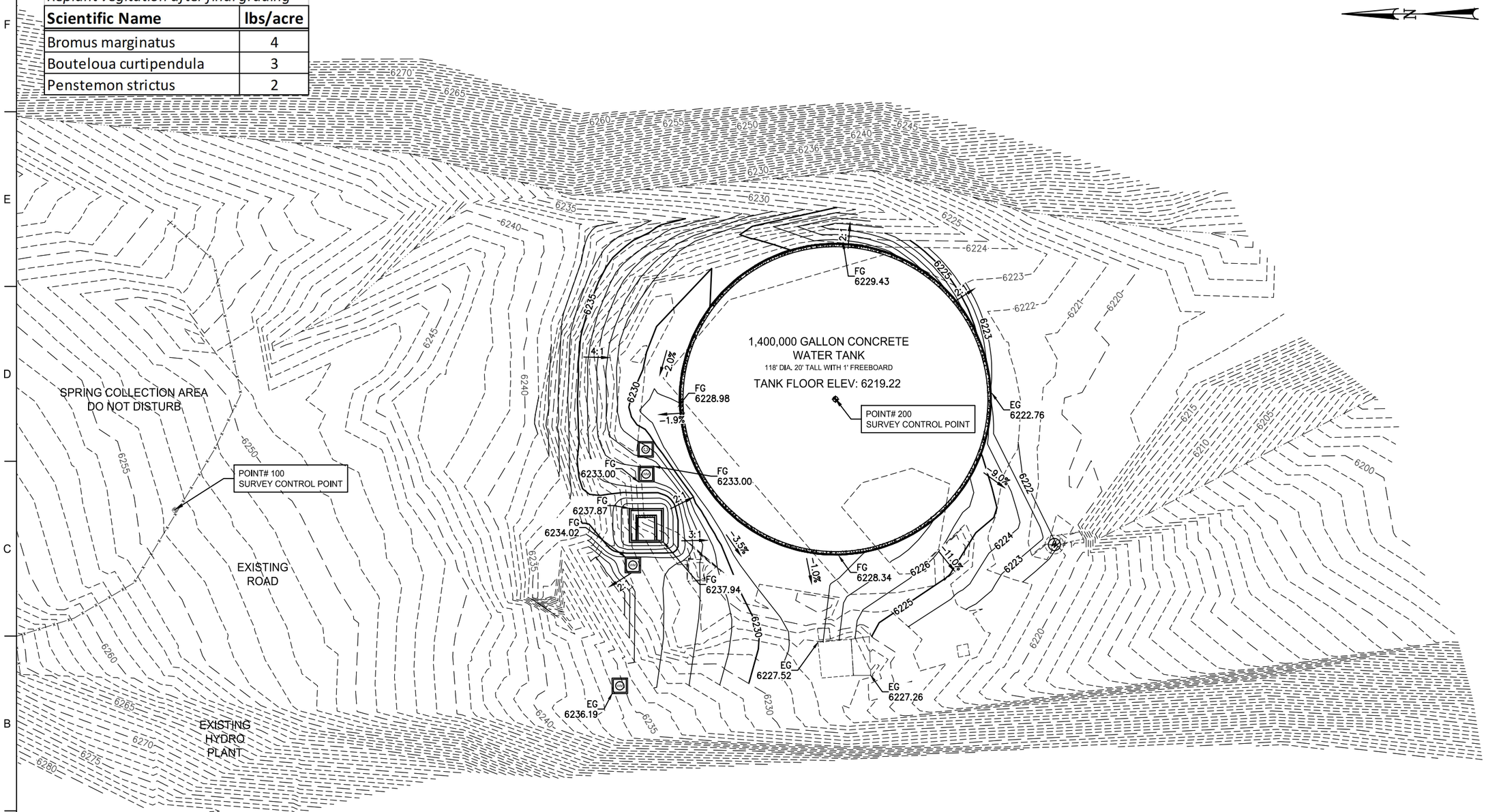

Know what's below. Call 811 before you dig.
BLUE STAKES OF UTAH
UTILITY NOTIFICATION CENTER, INC.
www.bluestakes.org
1-800-662-4111

Jones & DeMille Engineering, Inc.
CIVIL ENGINEERING - SURVEYING - TESTING
GIS - ENVIRONMENTAL
1.800.748.5275 www.jonesanddemille.com

NO.	DATE	REMARKS

REVISIONS

UPDATED:
PLOTTED:

DWG NAME:

SCALE: 1" = 40'

APPROVAL RECOMM: DATE

PROJECT DESIGN ENGINEER

APPROVED DATE

QUALITY MANAGEMENT REVIEW

SPRINGVILLE CITY

BARTHOLOMEW WATER TANK

SITE GRADING PLAN

PROJECT NUMBER: 1802-207

UTAH
COUNTY

SHEET NO. C-103

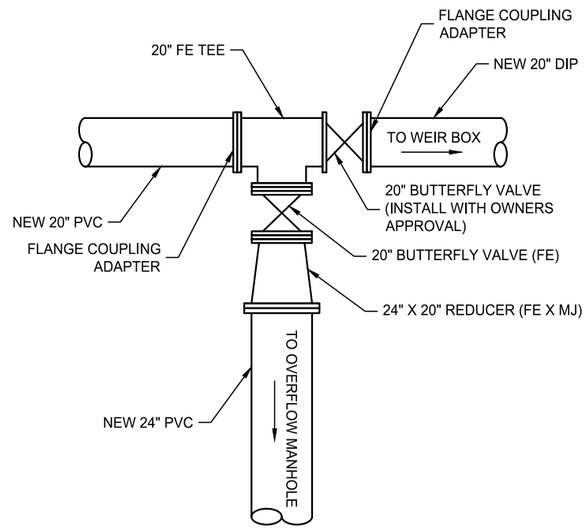

DETAIL #1
HYDRO WASTE LINE CONNECTION

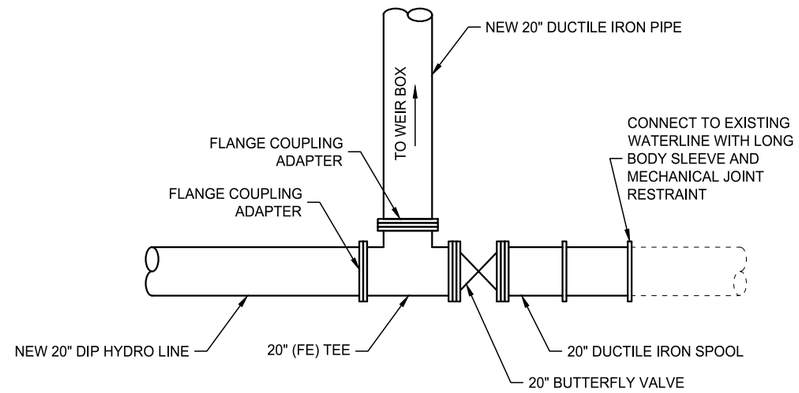

DETAIL #2
HYDRO LINE BRANCH CONNECTION
NOTE: REMOVE EXISTING PIPING AS NECESSARY

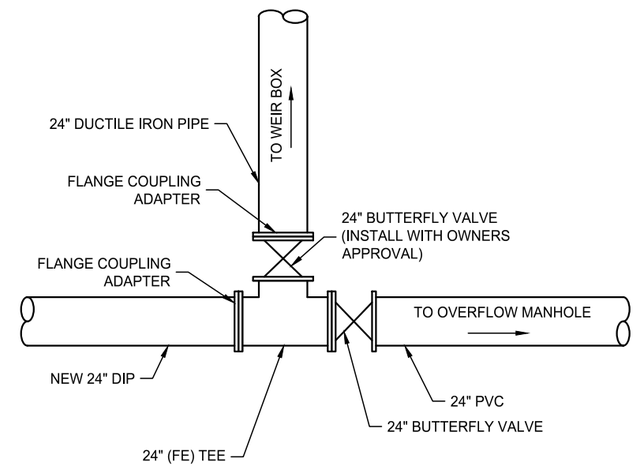

DETAIL #3
SPRING LINE BRANCH CONNECTION

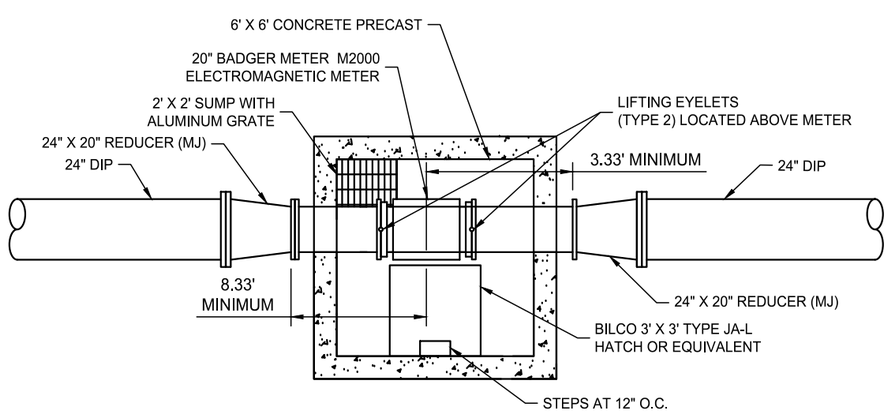

DETAIL #4
TANK METER CONNECTION

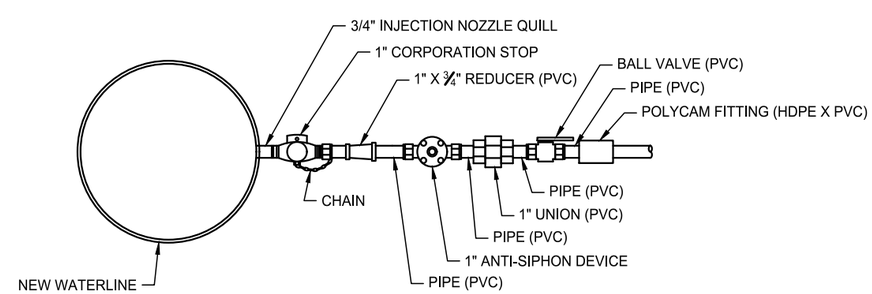

INJECTION DETAIL
NOT TO SCALE

NO.	DATE	REMARKS

REVISIONS

UPDATED: 8/14/2019
PLOTTED: 8/14/2019

DWG NAME:

SCALE: 1" = 5'

Jones & DeMille Engineering, Inc.
CIVIL ENGINEERING - SURVEYING - TESTING
GIS - ENVIRONMENTAL
1.800.748.5275 www.jonesanddemille.com

APPROVAL RECOMM. DATE
PROJECT DESIGN ENGINEER DATE
APPROVED DATE
QUALITY MANAGEMENT REVIEW

SPRINGVILLE CITY
BARTHOLOMEW WATER TANK
DETAILS
PROJECT NUMBER: 1802-207

UTAH
COUNTY

SHEET NO. C-501

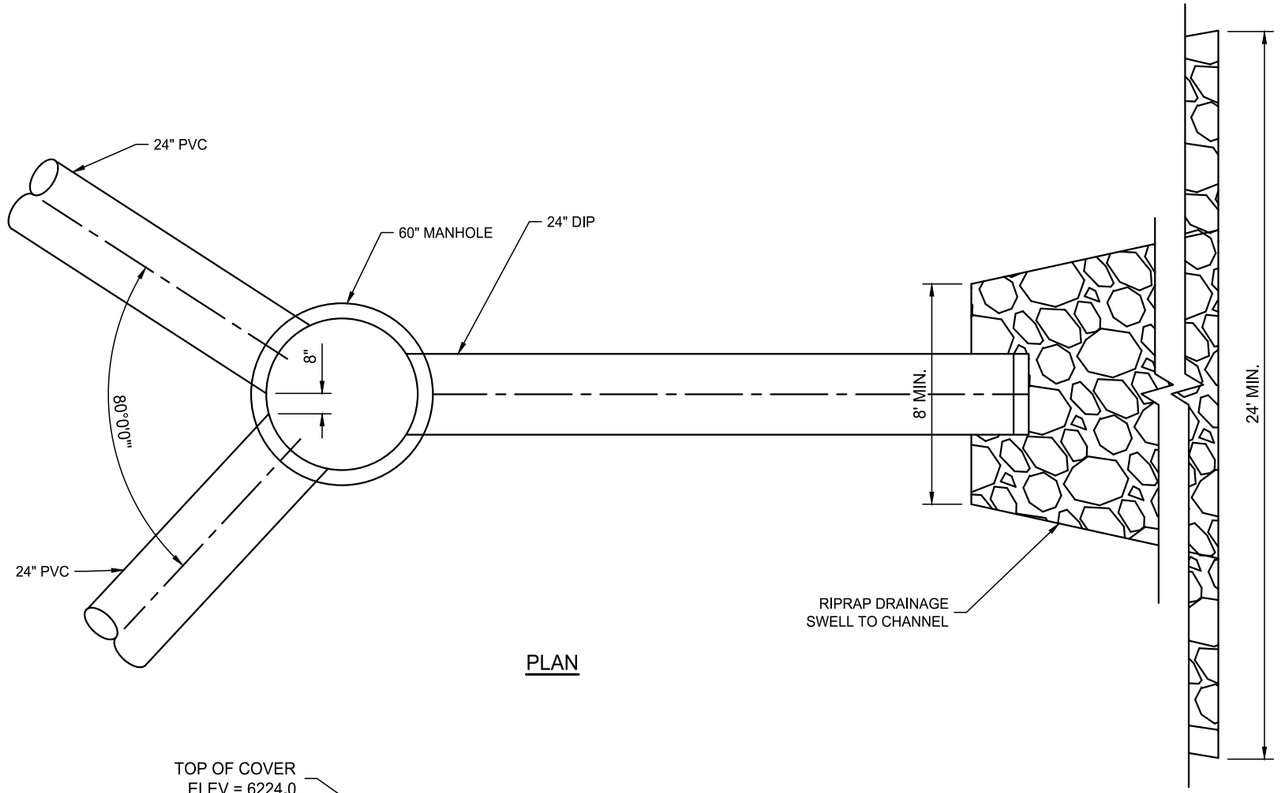

PLAN

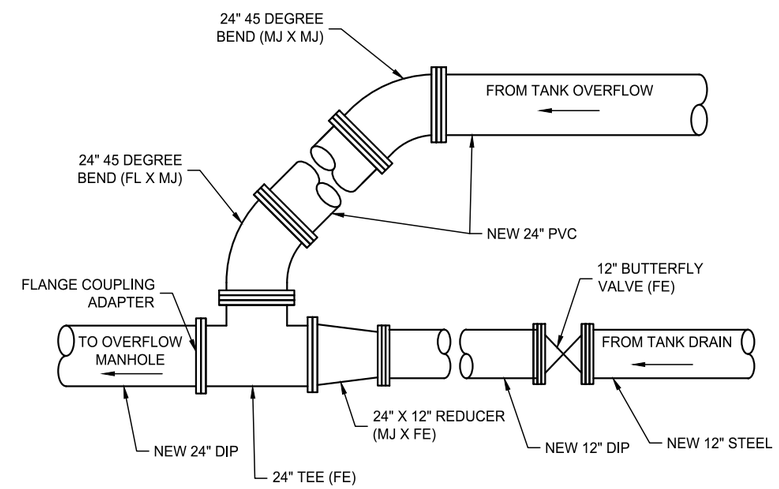

DETAIL #6
TANK DRAIN AND OVERFLOW CONNECTION DETAIL

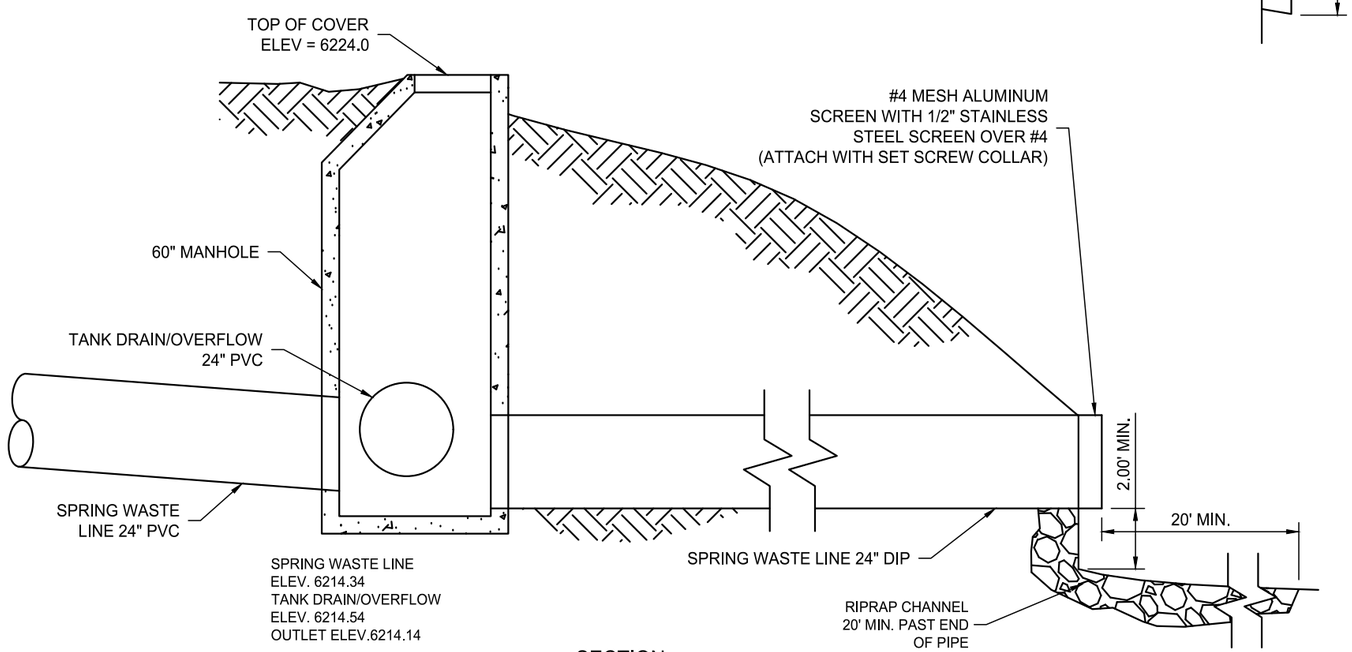

SECTION

DETAIL #5
OVERFLOW MANHOLE

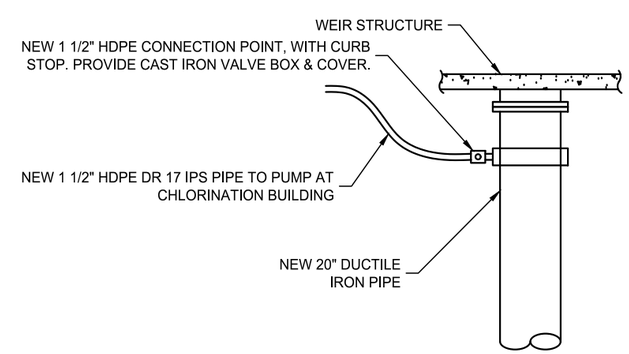

DETAIL #7
CHLORINE WATERLINE DETAIL

NO.	DATE	REMARKS

REVISIONS

UPDATED: 8/14/2019
PLOTTED: 8/14/2019

DWG NAME:

SCALE: 1" = 5'

Jones & DeMille Engineering, Inc.
CIVIL ENGINEERING - SURVEYING - TESTING
GIS - ENVIRONMENTAL
1.800.748.5275 www.jonesanddemille.com

APPROVAL RECOMM: PROJECT DESIGN ENGINEER DATE

APPROVED QUALITY MANAGEMENT REVIEW DATE

SPRINGVILLE CITY

BARTHOLOMEW WATER TANK

DETAILS

PROJECT NUMBER: 1802-207

UTAH
COUNTY

SHEET NO. C-502

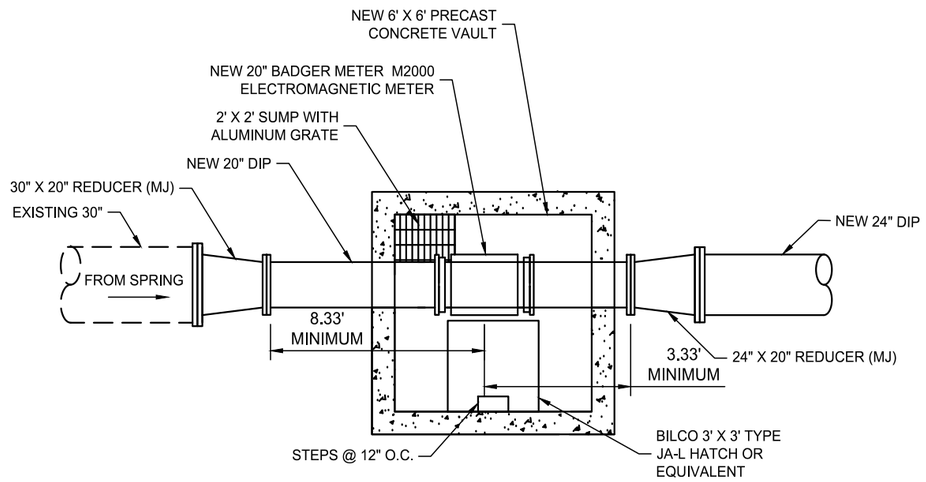

DETAIL #8
SPRING LINE METER CONNECTION
NOTE: REMOVE EXISTING PIPING AS NECESSARY

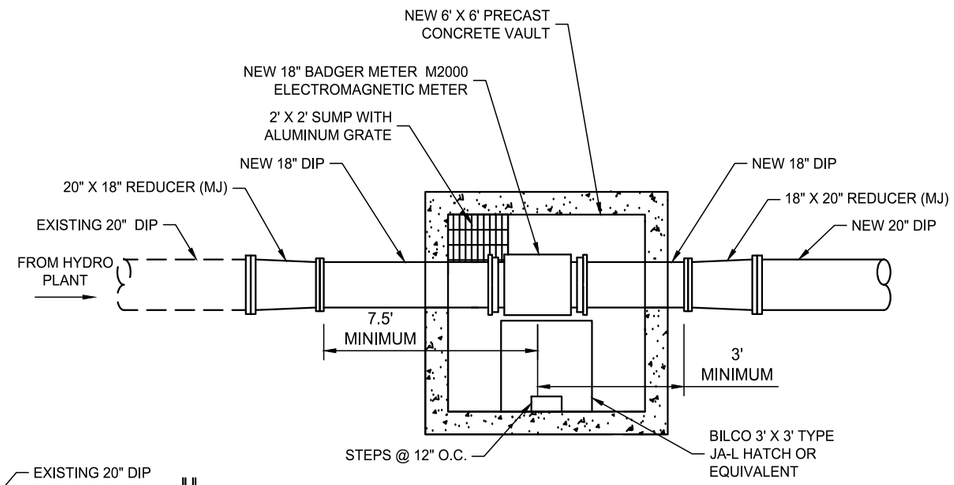

DETAIL #9
HYDRO LINE METER CONNECTION
NOTE: REMOVE EXISTING PIPING AS NECESSARY

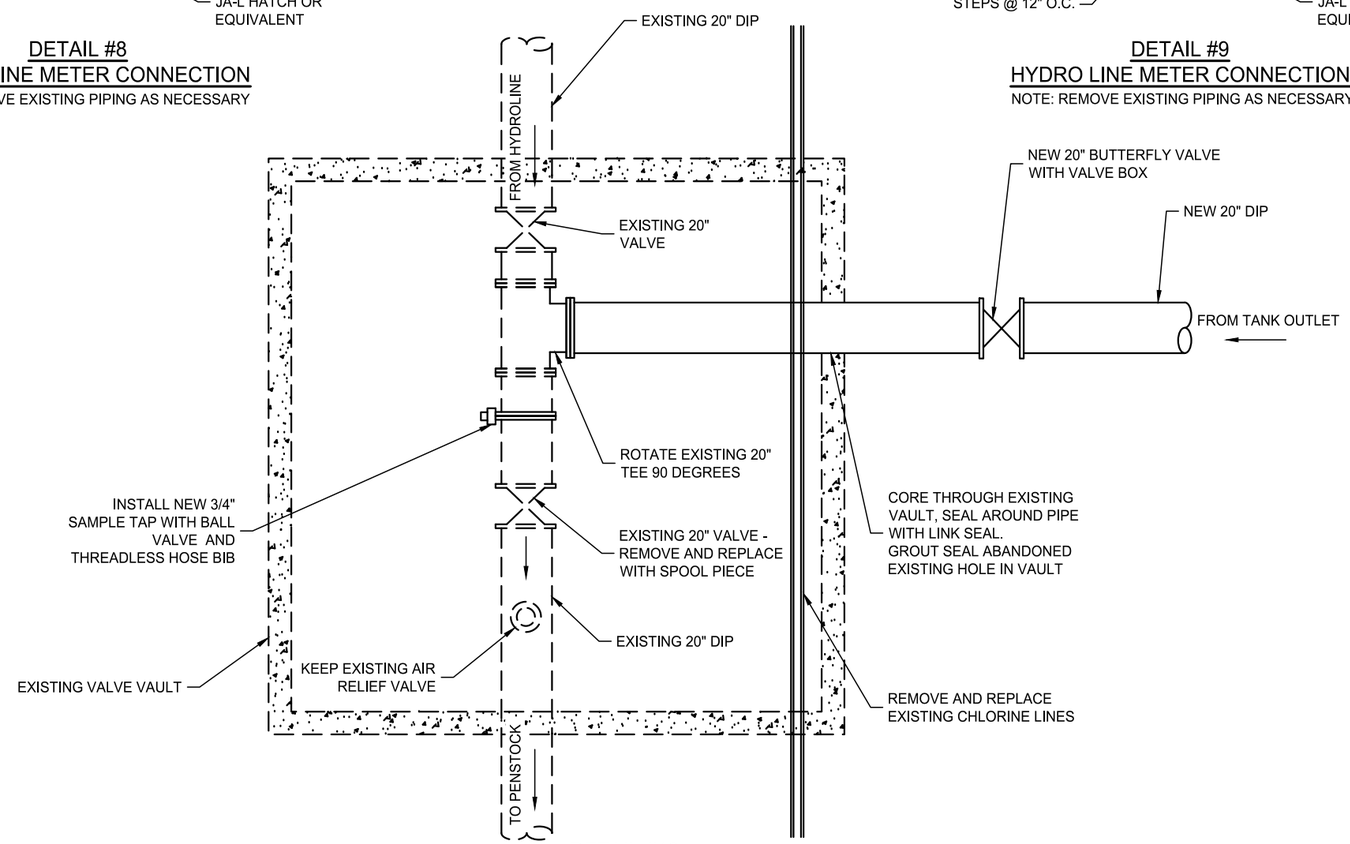

DETAIL #10
TANK OUTLET VALVE VAULT CONNECTION

NO.	DATE	REMARKS

REVISIONS

UPDATED: 8/14/2019
PLOTTED: 8/14/2019

DWG NAME:

SCALE: 1" = 5'

Jones & DeMille Engineering, Inc.
CIVIL ENGINEERING - SURVEYING - TESTING
GIS - ENVIRONMENTAL
1.800.748.5275 www.jonesanddemille.com

APPROVAL RECOMM: PROJECT DESIGN ENGINEER DATE
APPROVED QUALITY MANAGEMENT REVIEW DATE

SPRINGVILLE CITY
BARTHOLOMEW WATER TANK
DETAILS

PROJECT NUMBER: 1802-207

UTAH
COUNTY

SHEET NO. C-503

DESIGN CRITERIA

BUILDING CODE: 2015 INTERNATIONAL BUILDING CODE
ACI 350-06 CODE REQUIREMENTS FOR ENVIRONMENTAL ENGINEERING CONCRETE STRUCTURES

CLASSIFICATION: RISK CATEGORY IV

LIVE LOADING
ROOF: 40 PSF

DEAD LOADING
ROOF: 100 PSF

SNOW LOADING (BASED ON 2015 IBC UTAH AMENDMENTS)
ELEVATION: 6,230 FT (APPROX.)
GROUND SNOW LOAD: Pg = 43 PSF
EXPOSURE FACTOR: Ce = 0.9
SNOW IMPORTANCE FACTOR: Is = 1.2
THERMAL FACTOR: Ct = 1.1
DESIGN SNOW LOAD: Pf = 97.4 PSF

SEISMIC LOADING
LOCATION: 40.22189° LAT., -111.50796LON.
SEISMIC IMPORTANCE FACTOR: Ie = 1.5
MAPPED SPECTRAL RESPONSE ACCELERATIONS: Ss = 0.769g S1 = 0.264g
SITE CLASS: C
SPECTRAL RESPONSE COEFFICIENTS: SDS = 0.560g SD1 = 0.270g
SEISMIC DESIGN CATEGORY: C

SOILS
SOIL BEARING PRESSURE: 5000 PSF, 3000 PSF (4' SQ OR SMALLER)
PROJECT GEOTECHNICAL INVESTIGATION:CONSILIDATED ENGINEERING LABORATORIES PROJ. # 20-06720

GENERAL NOTES

1. NOTES AND TYPICAL DETAILS SHALL APPLY UNLESS OTHERWISE SHOWN OR NOTED ON PLANS.
2. DETAILS OF CONSTRUCTION NOT FULLY SHOWN SHALL BE OF THE SAME NATURE AS SHOWN FOR SIMILAR CONDITION.
3. CONSTRUCTION SHALL CONFORM TO ALL APPLICABLE CODES AND REGULATIONS.
4. CONTRACTOR SHALL VERIFY ALL DIMENSIONS, ELEVATIONS, PROPERTY LINES ETC. ON THE JOB.
5. CONTRACTOR SHALL NOTIFY THE ENGINEER WHERE CONFLICT OCCURS ON ANY OF THE CONTRACT DRAWINGS OR DOCUMENTS. CONTRACTOR IS NOT TO ORDER MATERIAL OR CONSTRUCT ANY PORTION OF THE STRUCTURE THAT IS IN CONFLICT UNTIL CONFLICT IS RESOLVED WITH AFFECTED PARTIES.
6. IF CONTRACTOR'S WORK IS NOT CONSTRUCTED ACCORDING TO APPROVED CONSTRUCTION DOCUMENTS (INCLUDING STAMPED WRITTEN COMMUNICATIONS), CONTRACTOR SHALL EITHER:
   A. REMOVE THE NON-CONFORMING WORK AND RECONSTRUCT THE WORK ACCORDING TO PLANS, AT CONTRACTOR'S OWN EXPENSE.
   B. PAY FOR AND PROVIDE AN EVALUATION AND LETTER FROM THE ENGINEER STATING THAT THE NON-CONFORMING WORK MEETS APPLICABLE BUILDING CODES.
   C. PAY FOR AND PROVIDE AN EVALUATION AND LETTER FROM THE ENGINEER STATING THAT THE NON-CONFORMING WORK DOES NOT MEET APPLICABLE BUILDING CODES AND DETAILING THE UPGRADES THAT ARE REQUIRED TO BRING THE NON-COMPLIANT WORK INTO COMPLIANCE.
7. VERBAL COMMUNICATIONS SHALL NOT BE CONSIDERED PART OF THE APPROVED CONSTRUCTION DOCUMENTS.

EARTHWORK

1. ENGINEER SHALL VERIFY CONDITION AND / OR ADEQUACY OF ALL SUB GRADES, FILLS, AND BACK FILLS, ETC..
2. IT SHALL BE THE RESPONSIBILITY OF THE CONTRACTOR TO SHORE AND BRACE AS REQUIRED.
3. ALL FOUNDATIONS ARE SHOWN AND DIMENSIONED AS BEING FORMED. FOUNDATIONS MAY BE PLACED IN NEAT EXCAVATIONS PROVIDED FOOTINGS ARE INCREASED 2" IN WIDTH.
4. EXCAVATIONS SHALL BE CLEANED OF ALL DEBRIS.
5. DE-WATER AS REQUIRED TO REMOVE STANDING WATER FROM EXCAVATIONS.
6. NOTIFY THE ENGINEER 48 HOURS IN ADVANCE OF PLACING CONCRETE.
7. SUPPORT FOOTINGS AND TANK FLOOR ON 12" OF SCARIFIED AND RECOMPACTED ON-SITE SOIL, OR THE SUBGRADE MAY BE OVEREXCAVATED 2'-0" AND REPLACEMENT WITH STRUCUTRUAL FILL.
8. REMOVE COBBLE & BOULDERS GREATER THAN 3" LOCATED AT BOTTOM OF EXCAVATION.
9. FILL BENEATH FOOTINGS SHALL BE COMPACTED TO 95% OF MAXIMUM LABORATORY DENSITY DETERMINED BY ASTM-D1557.
10. REFER TO GETECHNICAL REPORT COMPLETED BY CONSOLIDATED ENGINEERING LABORATORIES PROJ. NO. 20-06720 FOR ANY FUTHER EARTHWORK INFORMANTION (CONTACT CHRIS GARRIS)

GRAPHICS LEGEND

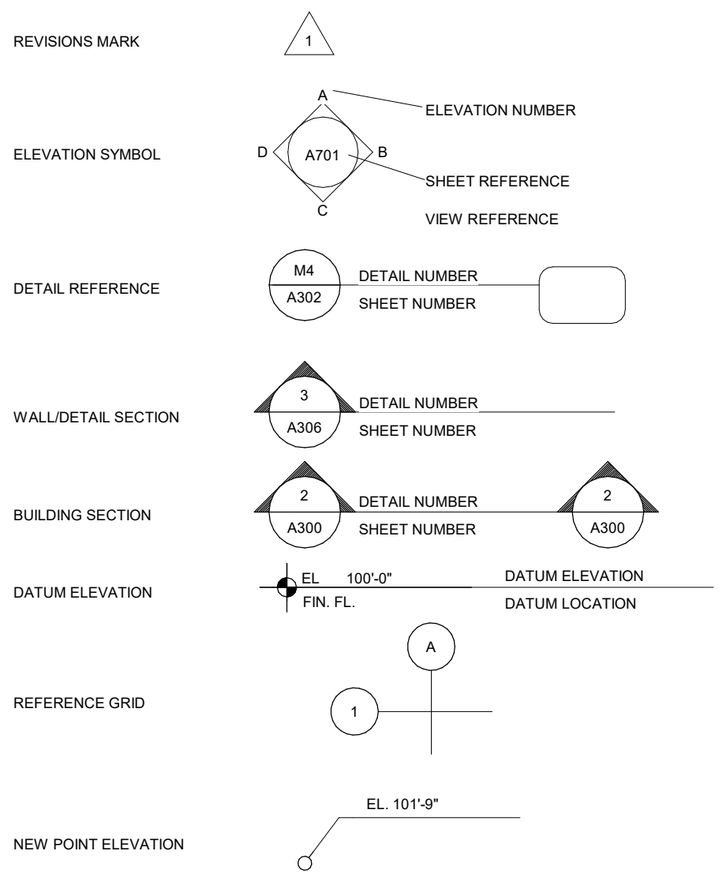

LEGEND

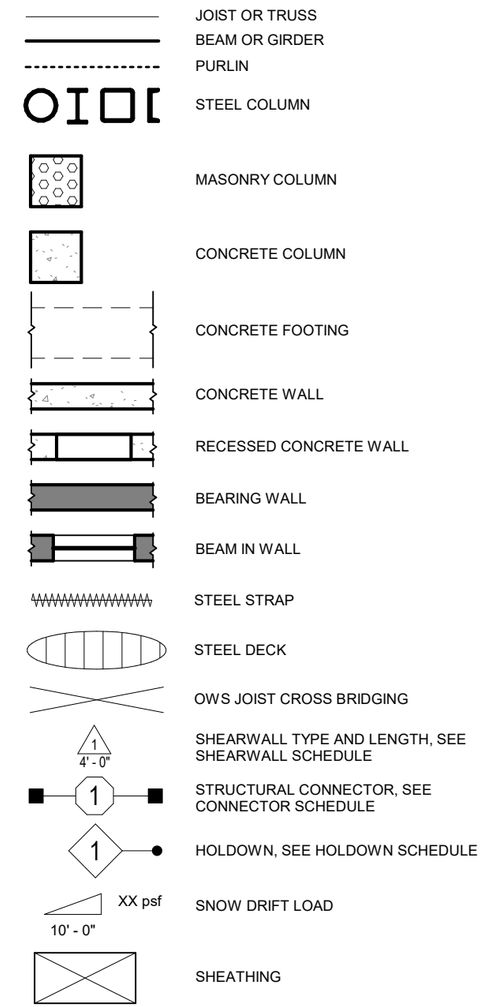

NO.	DATE	REMARKS

REVISIONS

UPDATED: 8/16/2019 1:40:51 PM

DWG NAME: C:\Users\Ben Arrington\Documents\SPRINGVILLE-WATER TANK_R22.dwg

SCALE: NTS

Jones & DeMille Engineering, Inc.
CIVIL ENGINEERING - SURVEYING - TESTING
GIS - ENVIRONMENTAL
1.800.748.5275 www.jonesanddemille.com

APPROVAL RECOMM: PROJECT DESIGN ENGINEER DATE:

APPROVED: QUALITY MANAGEMENT REVIEW DATE:

SPRINGVILLE CITY

BARTHOLOMEW WATER TANK

STRUCTURAL NOTES

PROJECT NUMBER: 1802-207

UTAH
COUNTY

SHEET NO. S-001

CONCRETE

1. CONSTRUCT CONCRETE ACCORDING TO ACI 318 (LATEST VERSION).
2. DETAIL, FABRICATE, AND INSTALL REINFORCING STEEL ACCORDING TO "MANUAL OF STANDARD PRACTICE OF REINFORCED CONCRETE CONSTRUCTION" BY CONCRETE REINFORCING STEEL INSTITUTE (CRSI).
3. GENERAL
   A. DO NOT PLACE PIPES OR DUCTS IN CONCRETE SLABS OR WALLS UNLESS SPECIFICALLY DETAILED.
   B. REFER TO ARCHITECTURAL, STRUCTURAL, CIVIL, ELECTRICAL AND MECHANICAL DRAWINGS FOR ALL MOLDS, GROOVES, ORNAMENTS, CLIPS AND GROUNDS TO BE CAST IN CONCRETE.
   C. DIMENSIONS SHOWN FOR LOCATION OF REINFORCING ARE TO FACE OF MAIN BARS AND DENOTE CLEAR COVERAGE.
4. SUBMIT CONCRETE PLACEMENT PLAN TO ENGINEER 48 HOURS PRIOR TO EACH CONCRETE PLACEMENT.
5. CONCRETE MIX DESIGN: PREPARED BY INDEPENDENT LABORATORY AND APPROVED BY ENGINEER OF RECORD.
6. CONCRETE
   A. LEAN CONCRETE FILL
      a. MINIMUM COMPRESSIVE STRENGTH: 1,500 PSI.
      b. CEMENT: ASTM C-150, TYPE II.
      c. MAXIMUM WATER-CEMENT RATIO: 0.55.
   B. STRUCTURAL CONCRETE
      a. MINIMUM COMPRESSIVE STRENGTH: 4,000 PSI.
      b. CEMENT: ASTM C-150, TYPE II.
      c. MAXIMUM WATER-CEMENT RATIO: 0.45.
   C. CONCRETE ON STEEL DECK (NORMAL WEIGHT)
      a. MINIMUM COMPRESSIVE STRENGTH: 1,500 PSI.
      b. CEMENT: ASTM C-150, TYPE II.
      c. MAXIMUM WATER-CEMENT RATIO: 0.55.
      d. UNIT WEIGHT: 145 PCF.
   D. CONCRETE ON STEEL DECK (LIGHT WEIGHT)
      a. MINIMUM COMPRESSIVE STRENGTH: 1,500 PSI.
      b. CEMENT: ASTM C-150, TYPE II.
      c. MAXIMUM WATER-CEMENT RATIO: 0.55.
      d. UNIT WEIGHT: 110 PCF.
7. CONCRETE EXPOSED TO EXTERIOR CONDITIONS: AIR ENTRAINED TO 5%-7% AIR CONTENT.
8. CONCRETE AGGREGATES: NATURAL SAND AND ROCK AGGREGATES CONFORMING TO ASTM C-33 (3/4" MAX).
9. REINFORCING FIBERS:
   A. NOT REQUIRED UNLESS INDICATED ON DRAWINGS.
   B. MACRO-SYNTHETIC FIBERS CONFORMING TO ASTM C1116.
   C. DOSAGE RATE: 4 POUNDS PER CUBIC YARD.
10. REINFORCING STEEL: ASTM A615 GRADE 60 UNO.
11. WIRE FABRIC: ASTM A-185.
12. WELDING OF REINFORCING STEEL: CONFORM TO AWS D1.4 USING PROPER LOW HYDROGEN ELECTRODES. DO NOT TACK WELD TO REBAR. SEE REBAR WELDING NOTE.
13. CONCRETE CLEAR COVERAGE, UNO:
    A. CONCRETE PLACED AGAINST FORMS (INCLUDING CONCRETE TO BE BACKFILLED): 2"
    B. CONCRETE PLACED AGAINST GROUND: 3"
    C. SLABS (ON GROUND): CENTER BAR IN SLAB.
14. PROVIDE CLASS B LAP SPLICE UNO. SEE TABLE "ACI TENSION LAP SPLICE LENGTHS".
15. LAP SPLICE WELDED WIRE FABRIC TWO SQUARES MIN. EACH DIRECTION.
16. RETAINING WALLS: PROVIDE 3/4" CHAMFER OR 3/4" RADIUS ON EXPOSED WALL CORNERS.
17. CONSTRUCT CONSTRUCTION JOINTS ROUGH, OR ROUGHEN JOINTS BY CHIPPING ENTIRE SURFACE, SANDBLASTING, OR HOSING SURFACE 4 TO 6 HOURS AFTER PLACEMENT WITH FINE SPRAY. REMOVE ALL LAITANCE FROM SURFACE.
18. REMOVE ALL DEBRIS FROM FORMS BEFORE PLACING ANY CONCRETE.
19. SECURELY POSITION REINFORCING DOWELS, BOLTS, ANCHORS, SLEEVES, ETC. TO BE EMBEDDED IN CONCRETE BEFORE PLACING CONCRETE (WET SETTING IS PROHIBITED).
20. OBTAIN APPROVAL OF ALL AFFECTED TRADES PRIOR TO PLACING CONCRETE.
21. MAXIMUM FREE FALL OF CONCRETE: 5'-0".
22. DO NOT USE WOOD SPREADERS. DO NOT USE WOOD STAKES IN AREAS TO BE CONCRETED.
23. DRILL THROUGH STEEL COLUMNS AND BEAMS TO PASS CONTINUOUS REINFORCING (1" DIA. MAX).
24. FOLLOW ACI HOT OR COLD WEATHER PLACEMENT RECOMMENDATIONS FOR CONCRETE PLACEMENT AND CURING.
25. EXERCISE SPECIFIC CARE DURING PLACEMENT AND CURING OF CONCRETE SLABS AND EXPOSED CONCRETE FINISHES.

CONCRETE REINFORCEMENT LAP SPLICES

f'c = 3,000 PSI									
LOCATION	REINFORCEMENT SIZE								
	#3	#4	#5	#6	#7	#8	#9	#10	#11
TOP	28	37	47	56	81	93	105	118	131
OTHER	23	29	37	43	63	72	81	91	102

f'c = 4,000 PSI									
LOCATION	REINFORCEMENT SIZE								
	#3	#4	#5	#6	#7	#8	#9	#10	#11
TOP	24	32	40	48	70	80	91	102	113
OTHER	20	25	31	38	55	62	70	79	87

f'c = 4,500 PSI									
LOCATION	REINFORCEMENT SIZE								
	#3	#4	#5	#6	#7	#8	#9	#10	#11
TOP	23	30	38	45	66	76	85	96	107
OTHER	18	23	30	35	52	59	66	74	83

1. TENSION DEVELOPMENT LENGTHS AND TENSION LAP SPLICE LENGTHS ARE BASED ON ACI 318-11, SECTIONS 12.2.2 AND 12.15 RESPECTIVELY. TABULATED VALUES FOR BEAMS OR COLUMNS ARE BASED ON TRANSVERSE REINFORCEMENT AND CONCRETE COVER MEETING MINIMUM CODE REQUIREMENTS.
2. LAP SPLICE LENGTHS SHOWN ARE FOR CLASS B AND CASE 1.
3. TOP REINFORCEMENT IS HORIZONTAL REINFORCEMENT THAT HAS MORE THAN TWELVE INCHES OF FRESH CONCRETE CAST BELOW IT. THIS INCLUDES HORIZONTAL REINFORCEMENT IN WALLS. ALL VERTICAL BARS ARE CONSIDERED AS "OTHER".
4. FOR LIGHTWEIGHT CONCRETE AGGREGATE CONCRETE, MULTIPLY TABULATED VALUES BY 1.3.
5. FOR EPOXY-COATED BARS, MULTIPLY TABULATED VALUES BY:
   A. TOP BARS: 1.31.
   B. OTHER BARS: 1.5.
6. FOR BARS WITH COVER OF LESS THAN 1 BAR DIAMETER OR WITH CLEAR SPACING OF LESS THAN 2 BAR DIAMETERS, MULTIPLE TABULATED VALUES BY 2.0.

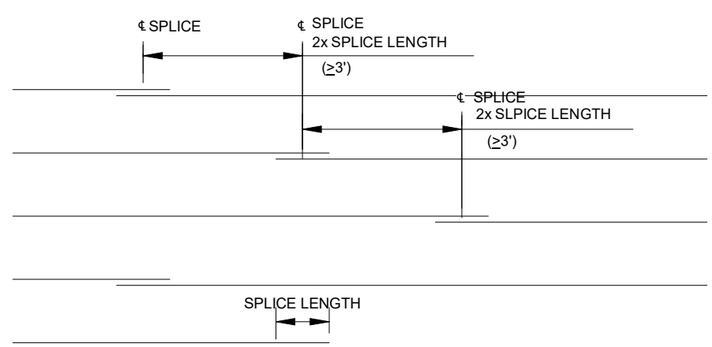

WATER TANK WALL STAGGERING OF HORIZONTAL REINFORCEMENT SPICES

QA PLAN

A. QUALITY ASSURANCE AGENCY (QAA) REQUIREMENTS:
1. THE OWNER OR REGISTERED DESIGN PROFESSIONAL IN RESPONSIBLE CHARGE ACTING AS THE OWNER'S AGENT SHALL ENGAGE A QUALIFIED QUALITY ASSURANCE AGENCY TO PROVIDE ALL SPECIAL INSPECTION AND QUALITY ASSURANCE TESTING FOR THE PROJECT. ALL QUALITY ASSURANCE PERSONNEL ASSIGNED TO THE PROJECT SHALL PROVIDE WRITTEN DOCUMENTATION TO THE BUILDING OFFICIAL DEMONSTRATING HIS OR HER COMPETENCE AND RELEVANT EXPERIENCE OR TRAINING.
2. PRIOR TO CONSTRUCTION, THE QAA SHALL PREPARE A WRITTEN QUALITY ASSURANCE IMPLEMENTATION PLAN FOR THE PROJECT. THE PLAN SHALL INCLUDE A LIST OF PERSONNEL ASSIGNED TO THE PROJECT INCLUDING MANAGEMENT PERSONNEL, INSPECTION PROCEDURES AND FREQUENCY, PROPOSED TESTING METHODS AND FREQUENCY OF TESTING, AND REPORTING PROCEDURES. THE PLAN SHALL ALSO OUTLINE METHODS OF DOCUMENTING DEFICIENCIES AND REPORTING CORRECTIONS. A COPY OF THE PLAN SHALL BE GIVEN TO THE CONTRACTOR FOR REVIEW AND COORDINATION WITH SUBCONTRACTORS.
3. THE SPECIAL INSPECTOR SHALL INSPECT THE WORK PER CHAPTER 17 OF THE IBC FOR CONFORMANCE WITH THE CONTRACT DOCUMENTS. THE SPECIAL INSPECTOR SHALL SEND REPORTS TO THE OWNER, BUILDING OFFICIAL, ARCHITECT, ENGINEER, AND CONTRACTOR. ALL NOTED DEFICIENCIES SHALL BE NOTED IN THE REPORT AND SHALL BE BROUGHT TO THE IMMEDIATE ATTENTION OF THE CONTRACTOR FOR CORRECTION. THE QAA SHALL SUBMIT A FINAL SIGNED REPORT STATING THAT THE SPECIAL INSPECTION WORK WAS, TO THE BEST OF THEIR KNOWLEDGE, IN CONFORMANCE WITH THE PLANS, SPECIFICATIONS AND APPLICABLE WORKMANSHIP PROVISIONS OF THE IBC.
4. CONTRACTOR IS ADVISED THAT ADDITIONAL SPECIAL INSPECTIONS AND TESTING MAY BE REQUIRED BY THE AUTHORITY HAVING JURISDICTION.

B. SPECIAL INSPECTION: SPECIAL INSPECTION SHALL BE PROVIDED FOR THE FOLLOWING ITEMS PER IBC 1704 AND 1707.
1. SOILS: SITE SOIL CONDITIONS, FILL PLACEMENT AND LOAD-BEARING REQUIREMENTS SHALL BE INSPECTED AS REQUIRED BY IBC 1705.6, THE APPROVED GEOTECHNICAL REPORT, AND THE CONSTRUCTION DOCUMENTS PREPARED BY THE REGISTERED DESIGN PROFESSIONALS. SPECIAL INSPECTION OF SOILS SHALL INCLUDE THE FOLLOWING:
   a) VERIFY MATERIALS BELOW SHALLOW FOUNDATION ARE ADEQUATE TO ACHIEVE THE DESIGN BEARING CAPACITY.
   b) VERIFY EXCAVATIONS ARE EXTENDED TO PROPER DEPTH AND HAVE REACHED PROPER MATERIAL.
   c) PERFORM CLASSIFICATION AND TESTING OF COMPACTED FILL MATERIALS.
   d) VERIFY USE OF PROPER MATERIALS, DENSITIES AND LIFT THICKNESS DURING PLACEMENT AND COMPACTION OF COMPACTED FILL.
   e) PRIOR TO PLACEMENT OF COMPACTED FILL, OBSERVE SUBGRADE AND VERIFY THAT SITE HAS BEEN PREPARED PROPERLY.
   f) SOILS SHALL RECEIVE CONTINUOUS SPECIAL INSPECTION DURING PLACEMENT OF MATERIALS TO VERIFY PROPER MATERIALS, DENSITIES, AND LIFT THICKNESS.
2. CONCRETE AND EMBEDDED ITEMS IN CONCRETE SHALL BE SPECIAL INSPECTED PRIOR TO AND DURING PLACEMENT OF CONCRETE. SPECIAL INSPECTION OF CONCRETE SHALL INCLUDE THE FOLLOWING:
   a) REINFORCING STEEL GRADE, SIZE AND PLACEMENT.
   b) SURFACE PREPARATION AT COLD JOINTS INCLUDING PLACEMENT OF KEYWAYS.
   c) BOLT AND EMBED SIZE, CONFIGURATION AND PLACEMENT.
   d) CONCRETE SHALL RECEIVE CONTINUOUS SPECIAL INSPECTION DURING PLACEMENT, AND PERIODIC INSPECTION AFTER PLACEMENT TO ENSURE PROPER CURING AND WEATHER PROTECTION PROCEDURES.

C. STRUCTURAL TESTING: THE FOLLOWING MATERIALS SHALL BE TESTED PER IBC 1705. THE OWNER RESERVES THE RIGHT TO TEST ANY AND ALL MATERIALS USING ANY APPROPRIATE NON-DESTRUCTIVE PROCEDURE. ANY ITEMS FOUND TO BE DEFICIENT SHALL BE CORRECTED AND RETESTED AT NO ADDITIONAL COST TO THE OWNER.
1. EARTHWORK: ALL COMPACTED STRUCTURAL FILL SHALL BE TESTED TO VERIFY SOIL GRADATION, LIFT THICKNESS, AND COMPACTION REQUIREMENTS. SEE THE PROJECT SPECIFICATIONS FOR TESTING FREQUENCY AND ACCEPTABILITY CRITERIA.
2. CONCRETE STRENGTH VERIFICATION AND TESTING. ALL CONCRETE SHALL BE TESTED TO VERIFY STRENGTH, SLUMP, UNIT WEIGHT, AIR CONTENT, AND TEMPERATURE. SEE THE PROJECT SPECIFICATIONS FOR TESTING CRITERIA, TESTING FREQUENCY AND ACCEPTABILITY CRITERIA.

NO.	DATE	REMARKS

REVISIONS

UPDATED: 8/16/2019 1:40:52 PM

DWG NAME: C:\Users\Ben Arrington\Documents\SPRINGVILLE-WATER TANK_R22.dwg

SCALE: As indicated

Jones & DeMille Engineering, Inc.
CIVIL ENGINEERING - SURVEYING - TESTING
GIS - ENVIRONMENTAL
1.800.748.5275 www.jonesanddemille.com

APPROVAL RECOMM: PROJECT DESIGN ENGINEER DATE:

APPROVED QUALITY MANAGEMENT REVIEW DATE:

SPRINGVILLE CITY

BARTHOLOMEW WATER TANK

STRUCTURAL NOTES

PROJECT NUMBER: 1802-207

UTAH
COUNTY

SHEET NO. S-002

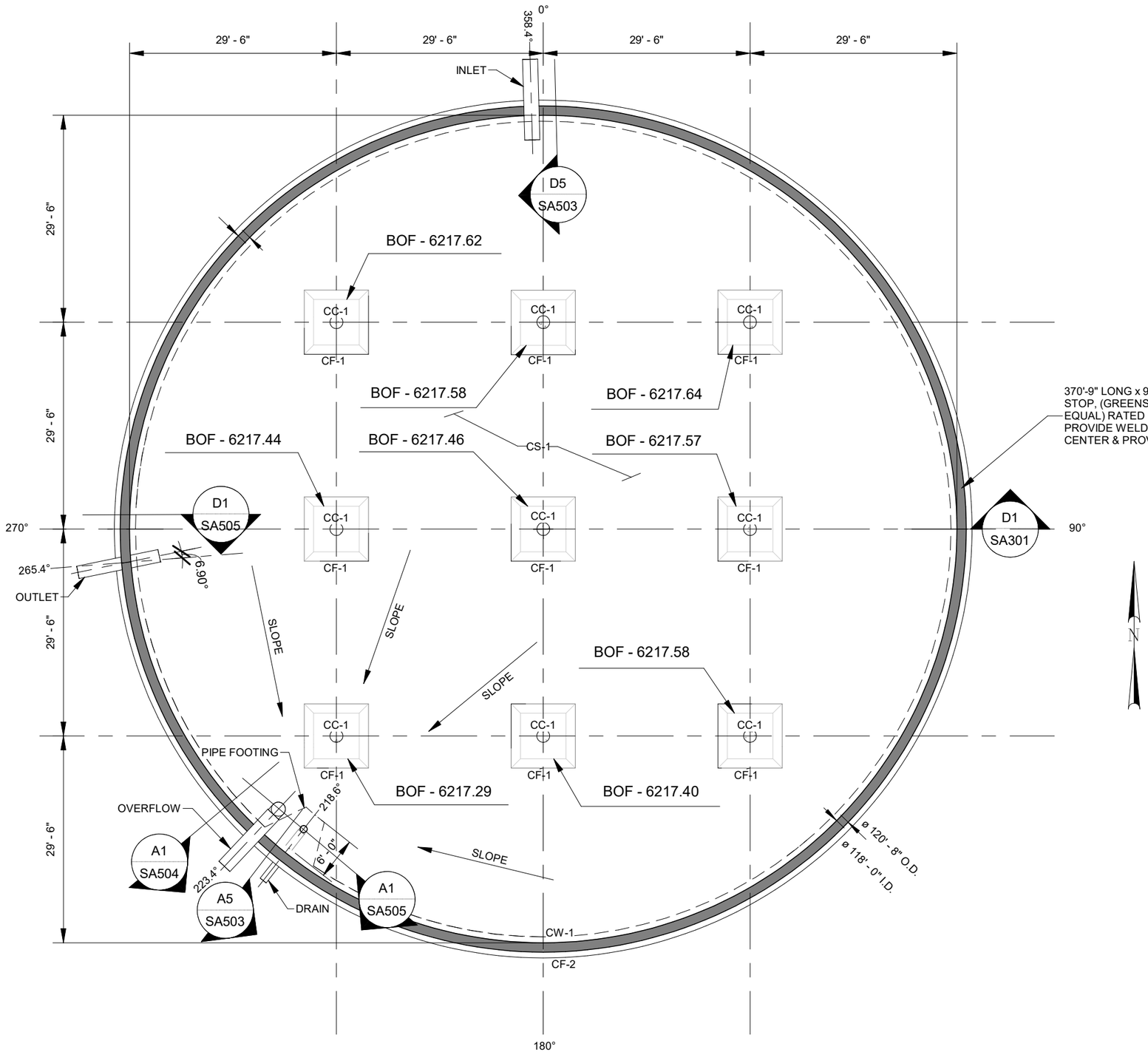

NOTES:

1. SLOPE TANK FLOOR AS SHOWN TO DRAIN PIPE.
2. REFER TO PROJECT GEOTECHINCAL REPORT FOR EARTHWORK RECOMMENDATION PERTAINING TO PAD PREPARATION, PLACEMENT, AND COMPACTION OF FILL MATERIAL.
3. EXTEND STRUCTURAL FILL LATERALLY A MINIMUM OF 18 INCHES FOR EVERY 12 VERTICAL INCHES OF STRUCTURAL FILL PLACED.
4. FOR STRUCTURAL SCHEDULE SEE SHEET S-601.

370'-9" LONG x 9" WIDE CONTINUOUS RIBBED PVC. WATER STOP, (GREENSTREAK MODEL #646 OR APPROVED EQUAL) RATED FOR 125' OF PRESSURE HEAD MINIMUM. PROVIDE WELDED BUTT-JOINT AT ENDS. PLACE AT WALL CENTER & PROVIDE 3" MIN. EMBEDMENT INTO FOOTING.

A1 | FOUNDATION PLAN

1/16" = 1'-0"

NO.	DATE	REMARKS

REVISIONS

UPDATED: 8/16/2019 1:40:52 PM

DWG NAME: C:\Users\Ben Arrington\Documents\SPRINGVILLE-WATER TANK.dwg

SCALE: As indicated

Jones & DeMille Engineering, Inc.
CIVIL ENGINEERING - SURVEYING - TESTING
GIS - ENVIRONMENTAL
1.800.748.5275 www.jonesanddemille.com

APPROVAL RECOMM: DATE:

PROJECT DESIGN ENGINEER

APPROVED DATE:

QUALITY MANAGEMENT REVIEW

SPRINGVILLE CITY

BARTHOLOMEW WATER TANK

FOUNDATION PLAN

PROJECT NUMBER: 1802-207

UTAH
COUNTY

SHEET NO. SA101

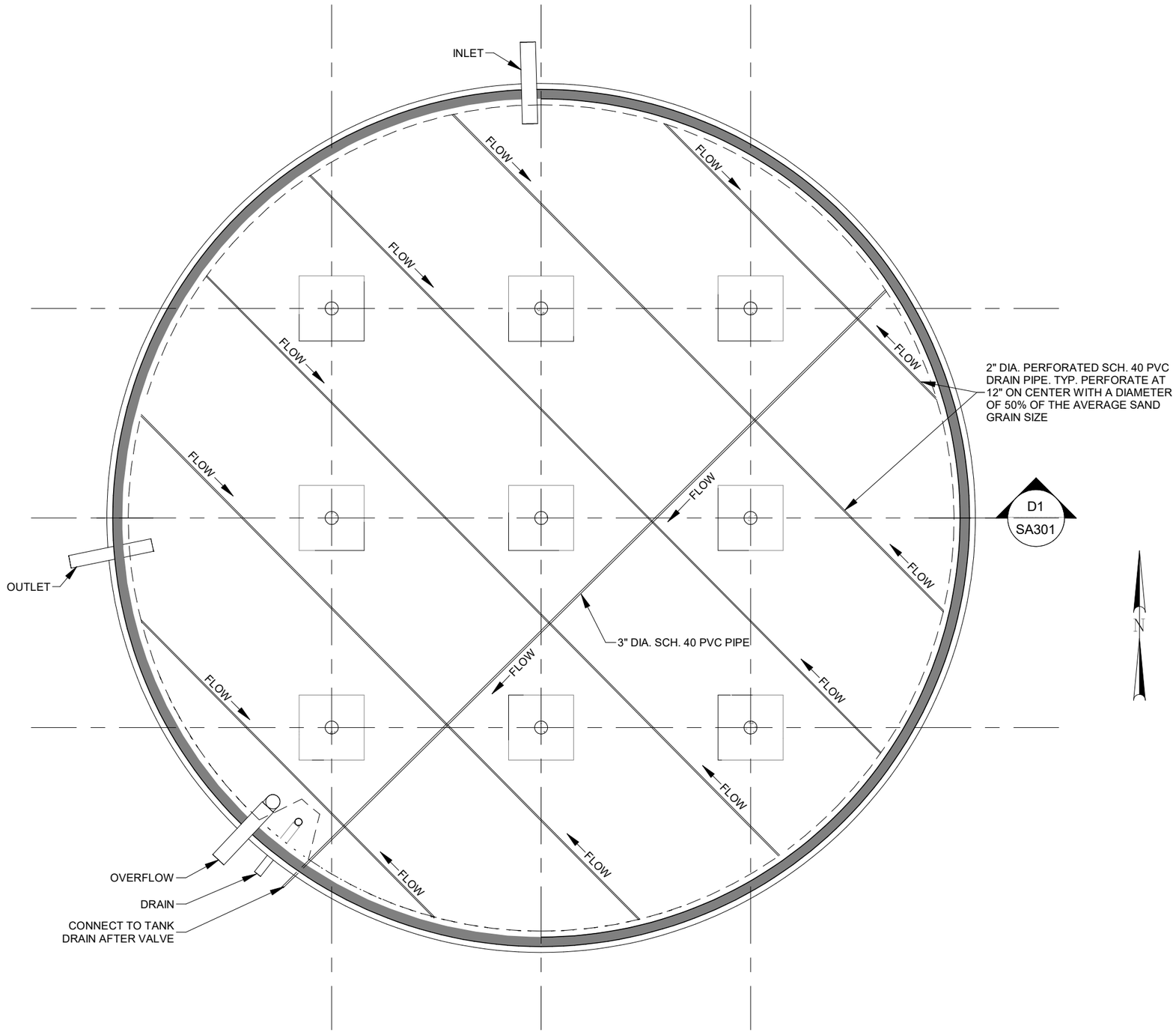

A1 | FIELD DRAIN PLAN

1/16" = 1'-0"

NO.	DATE	REMARKS

REVISIONS

SCALE: 1/16" = 1'-0"

DWG NAME: C:\Users\Ben Arrington\Documents\SPRINGVILLE-WATER TANK-base.dwg

UPDATED: 8/16/2019 1:40:52 PM

Jones & DeMille Engineering, Inc.
CIVIL ENGINEERING - SURVEYING - TESTING
GIS - ENVIRONMENTAL
1.800.748.5275 www.jonesanddemille.com

APPROVAL RECOMM: PROJECT DESIGN ENGINEER DATE:

APPROVED: QUALITY MANAGEMENT REVIEW DATE:

SPRINGVILLE CITY

BARTHOLOMEW WATER TANK

FIELD DRAIN PLAN

PROJECT NUMBER: 1802-207

UTAH
COUNTY

SHEET NO. SA102

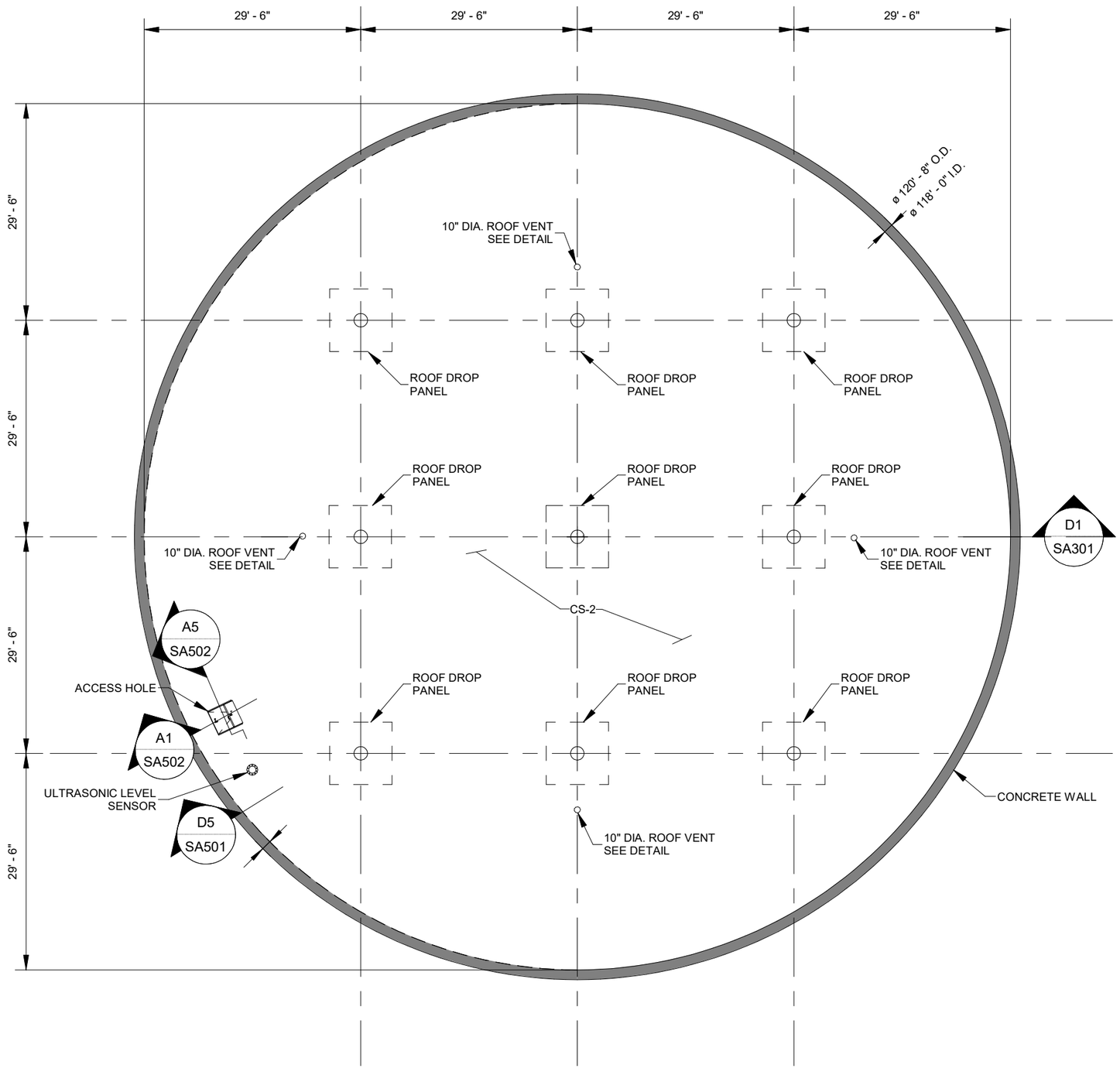

NOTES:
1. SEE SHEET S1-601 FOR STRUCTURAL SCHEDULE

A1 ROOF PLAN

1/16" = 1'-0"

NO.	DATE	REMARKS

REVISIONS

UPDATED: 8/16/2019 1:40:54 PM

DWG NAME: C:\Users\Ben Arrington\Documents\SPRINGVILLE-WATER TANK_R19.dwg

SCALE: 1/16" = 1'-0"

Jones & DeMille Engineering, Inc.
CIVIL ENGINEERING - SURVEYING - TESTING
GIS - ENVIRONMENTAL
1.800.748.5275 www.jonesanddemille.com

APPROVAL RECOMM: PROJECT DESIGN ENGINEER DATE:

APPROVED QUALITY MANAGEMENT REVIEW DATE:

SPRINGVILLE CITY

BARTHOLOMEW WATER TANK

ROOF PLAN

PROJECT NUMBER: 1802-207

UTAH
COUNTY

SHEET NO. SA103

NOTE:
1. COORDINATE W/ SITE PLAN FOR FINISHED GRADE
2. SLOPE FLOOR TO DRAIN.

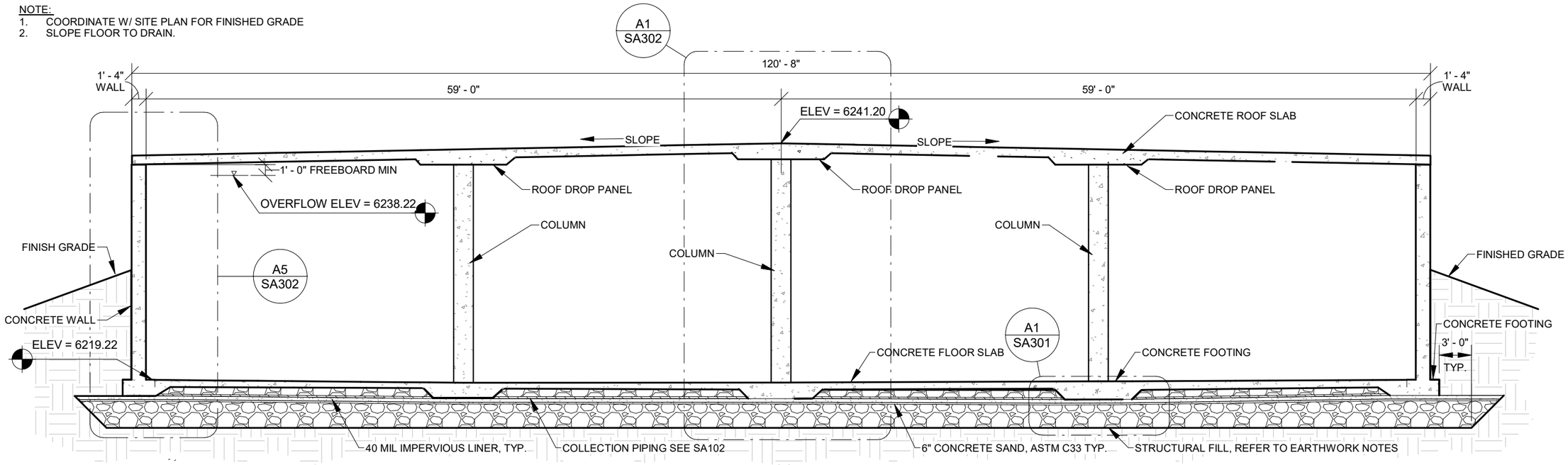

D1 TANK CROSS SECTION

1" = 10'-0"

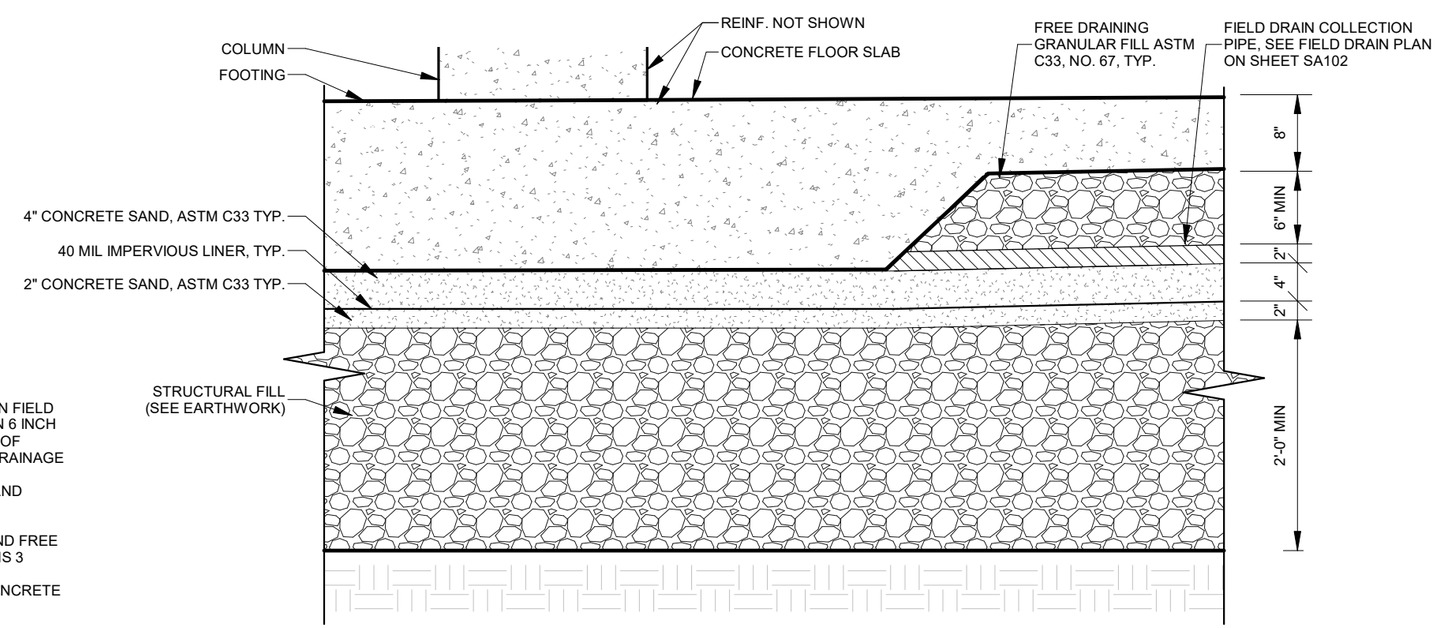

DRAIN FIELD NOTES:
1. 2 INCH DIA. PERFORATED SCH. 40 PVC PIPE PLACE IN GRID AS SHOWN ON FIELD DRAIN PLAN, SHEET SA102, TO COLLECT WATER UNDER TANK PLACED IN 6 INCH FREE DRAINING GRANULAR FILL AND ENSURE DRAINAGE TO DRAIN PIPE OF TANK. COLLECT ALL DRAINAGE WATER INTO 3 INCH PIPE AND ENSURE DRAINAGE AWAY FROM TANK.
2. PERFORATE 12 INCHES ON CENTER WITH A DIA. OF 50% OF AVERAGE SAND GRAIN SIZE.
3. INSTALLED 3 INCH DRAIN LINE TO TERMINATE IN TANK DRAIN PIPE.
4. MINIMUM 38 INCHES STRUCTURAL FILL (GRANULAR FILL, SAND, LINER, AND FREE DRAINING GRANULAR FILL) UNDER ALL FOOTINGS AND FLOOR LOCATIONS 3 FEET FROM OUTSIDE EDGE OF FOOTINGS.
5. LOWER IMPERVIOUS LINER AND OTHER LAYERS AT DRAIN TO ALLOW CONCRETE AROUND PIPES.

A1 TANK STRUCTURAL FILL SECTION

NTS

NO.	DATE	REVISIONS	REMARKS

UPDATED: 8/16/2019 1:40:54 PM

DWG NAME: C:\Users\Ben Arrington\Documents\SPRINGVILLE-WATER TANK_R22.dwg

SCALE: As indicated

Jones & DeMille Engineering, Inc.
CIVIL ENGINEERING - SURVEYING - TESTING
GIS - ENVIRONMENTAL
1.800.748.5275 www.jonesanddemille.com

APPROVAL RECOMM: PROJECT DESIGN ENGINEER DATE:

APPROVED QUALITY MANAGEMENT REVIEW DATE:

SPRINGVILLE CITY

BARTHOLOMEW WATER TANK

TANK SECTION

PROJECT NUMBER: 1802-207

UTAH COUNTY

SHEET NO. SA301

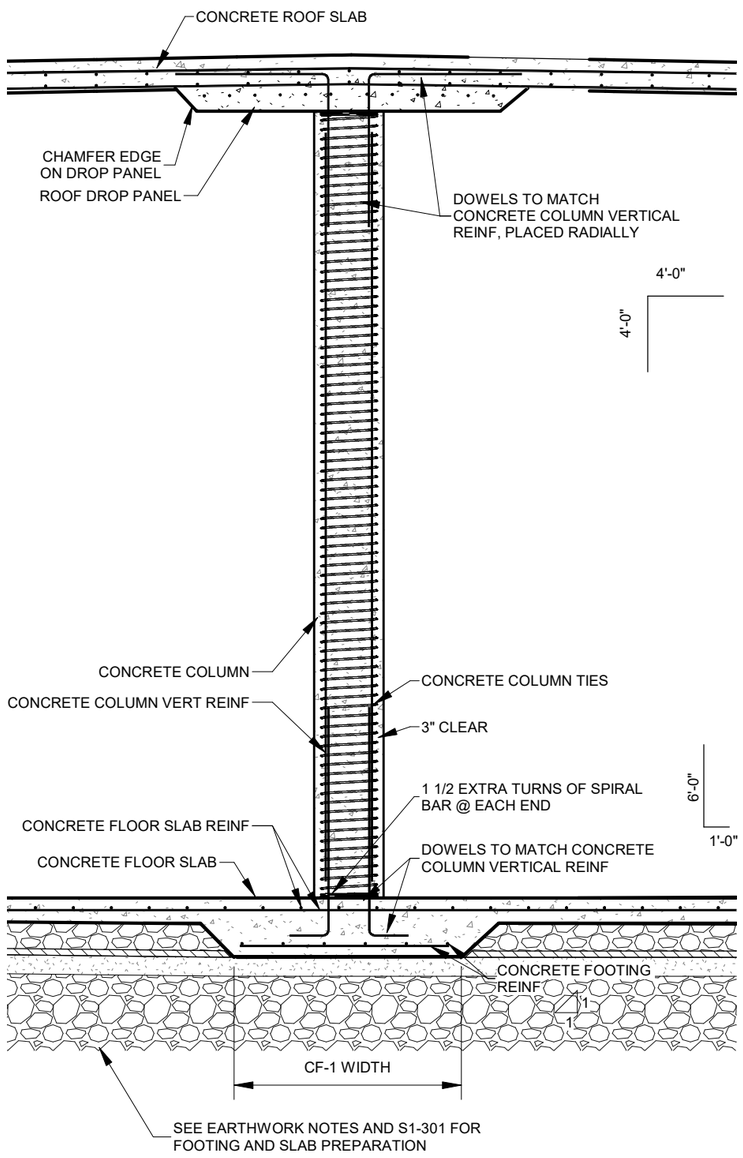

NOTE:
1. ORIENT ROOF AND FLOOR BARS TO BE PARALLEL TO COLUMN CENTERLINES.
2. SEE SHEET S-601 FOR STRUCTURAL SCHEDULES

A1	ROOF SLAB, FLOOR SLAB, AND COLUMN SECTION
1/4" = 1'-0"	

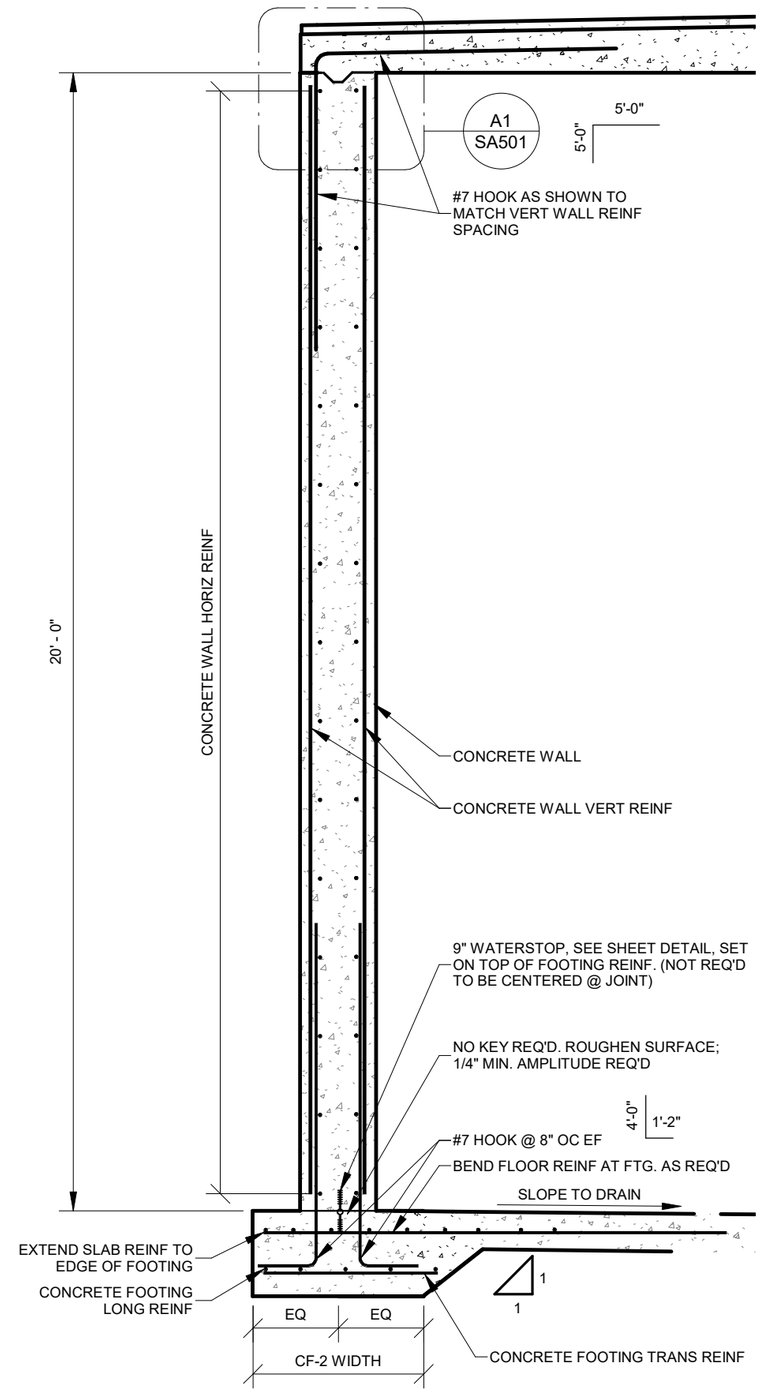

NOTE:
1. SEE SHEET SA601 FOR STRUCTURAL SCHEDULES

A5	WALL AND WALL FOOTING SECTION
3/8" = 1'-0"	

NO.	DATE	REVISIONS	REMARKS

UPDATED: 8/16/2019 1:41:00 PM

DWG NAME: C:\Users\Ben Arrington\Documents\SPRINGVILLE-WATER TANK_R22.dwg

SCALE: As indicated

Jones & DeMille Engineering, Inc.
CIVIL ENGINEERING - SURVEYING - TESTING
GIS - ENVIRONMENTAL
1.800.748.5275 www.jonesanddemille.com

APPROVAL RECOMM: PROJECT DESIGN ENGINEER DATE:

APPROVED QUALITY MANAGEMENT REVIEW DATE:

SPRINGVILLE CITY
BARTHOLOMEW WATER TANK
TANK SECTION

PROJECT NUMBER: 1802-207

UTAH
COUNTY

SHEET NO. SA302

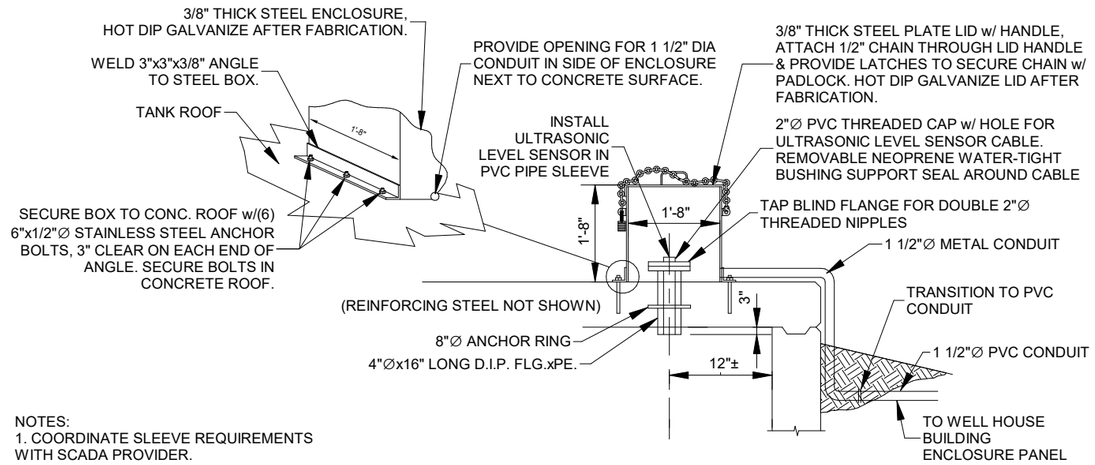

NOTES:
1. COORDINATE SLEEVE REQUIREMENTS WITH SCADA PROVIDER.

D5 — ULTRASONIC LEVEL SENSOR SLEEVE / ENCLOSURE

NTS

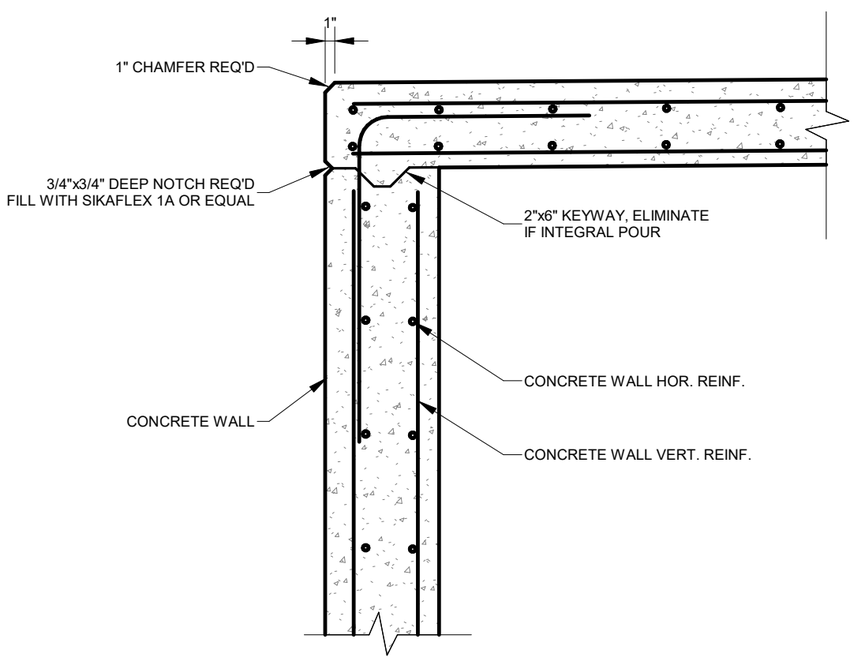

A1 — ROOF EDGE DETAIL-CAST-IN-PLACE ROOF

3/4" = 1'-0"

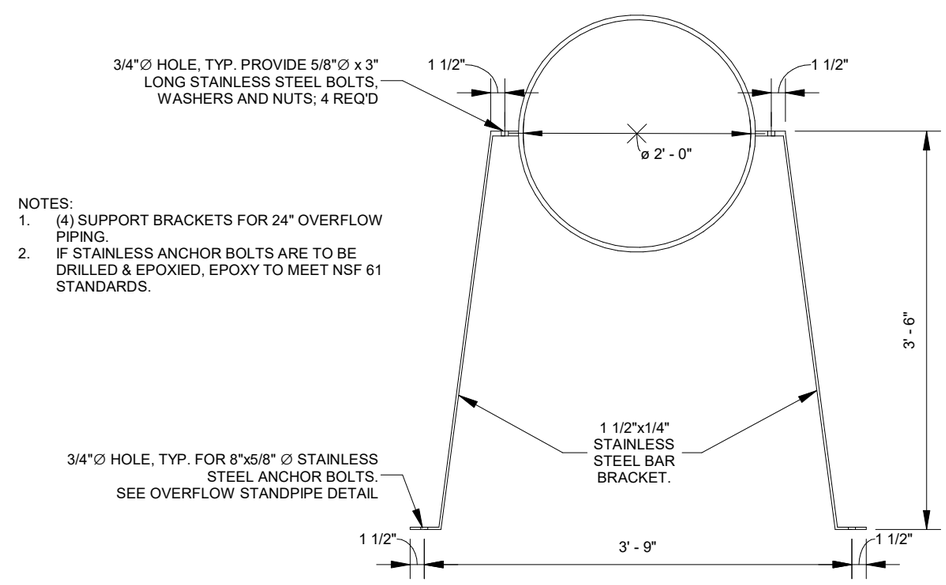

NOTES:
1. (4) SUPPORT BRACKETS FOR 24" OVERFLOW PIPING.
2. IF STAINLESS ANCHOR BOLTS ARE TO BE DRILLED & EPOXIED, EPOXY TO MEET NSF 61 STANDARDS.

A5 — STANDPIPE SUPPORT BRACKET

3/4" = 1'-0"

NO.	DATE	REMARKS

REVISIONS

UPDATED: 8/16/2019 1:41:00 PM

DWG NAME: C:\Users\Ben Arrington\Documents\SPRINGVILLE-WATER TANK-bsa-ar.dwg

SCALE: 3/4" = 1'-0"

Jones & DeMille Engineering, Inc.
CIVIL ENGINEERING - SURVEYING - TESTING
GIS - ENVIRONMENTAL
1.800.748.5275 www.jonesanddemille.com

APPROVAL RECOMM: PROJECT DESIGN ENGINEER DATE:

APPROVED QUALITY MANAGEMENT REVIEW DATE:

SPRINGVILLE CITY

BARTHOLOMEW WATER TANK

TANK DETAILS

PROJECT NUMBER: 1802-207

UTAH COUNTY

SHEET NO. SA501

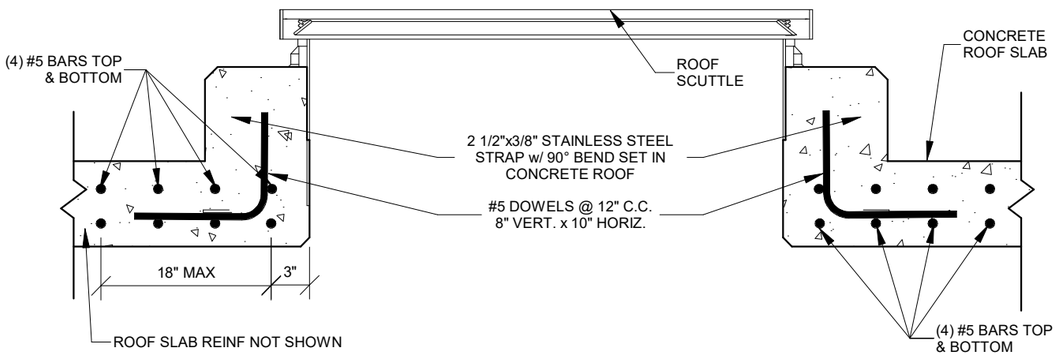

D1 ACCESS HOLE SECTION

1" = 1'-0"

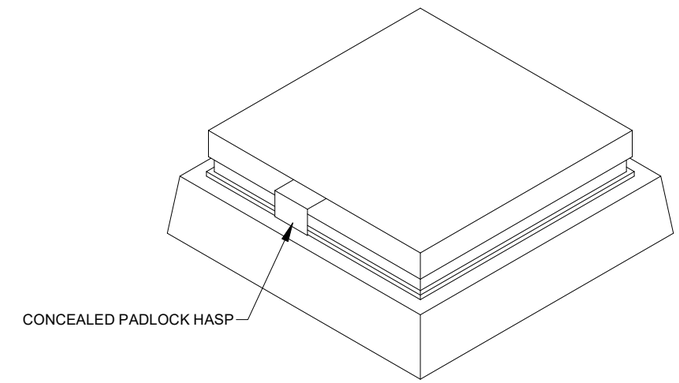

D5 ACCESS HOLE 3D VIEW

1" = 1'-0"

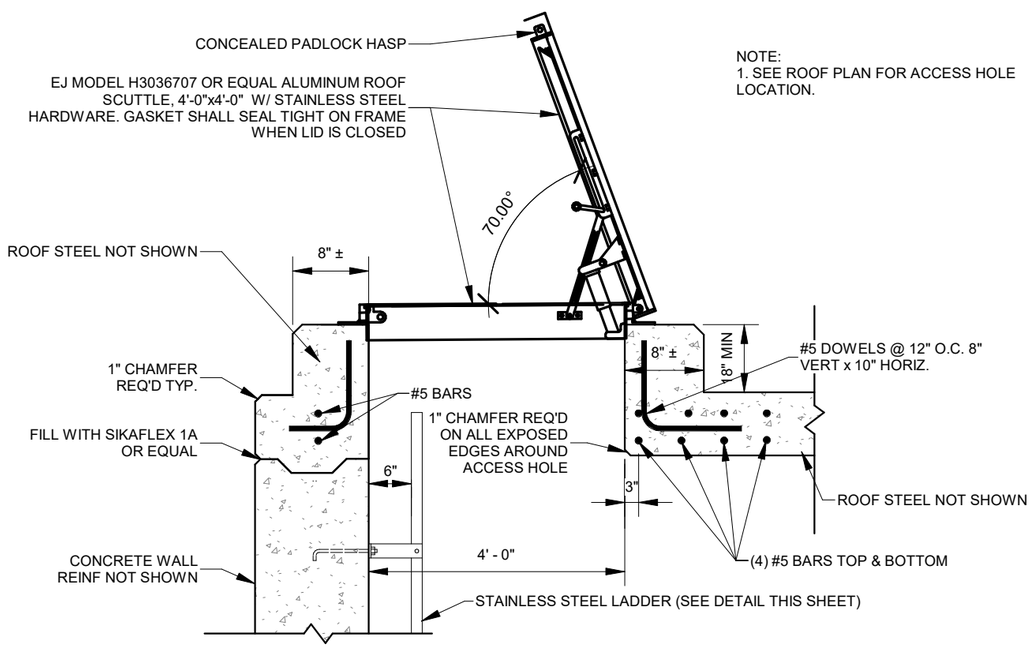

NOTE:
1. SEE ROOF PLAN FOR ACCESS HOLE LOCATION.

A1 ACCESS HOLE DETAIL

3/4" = 1'-0"

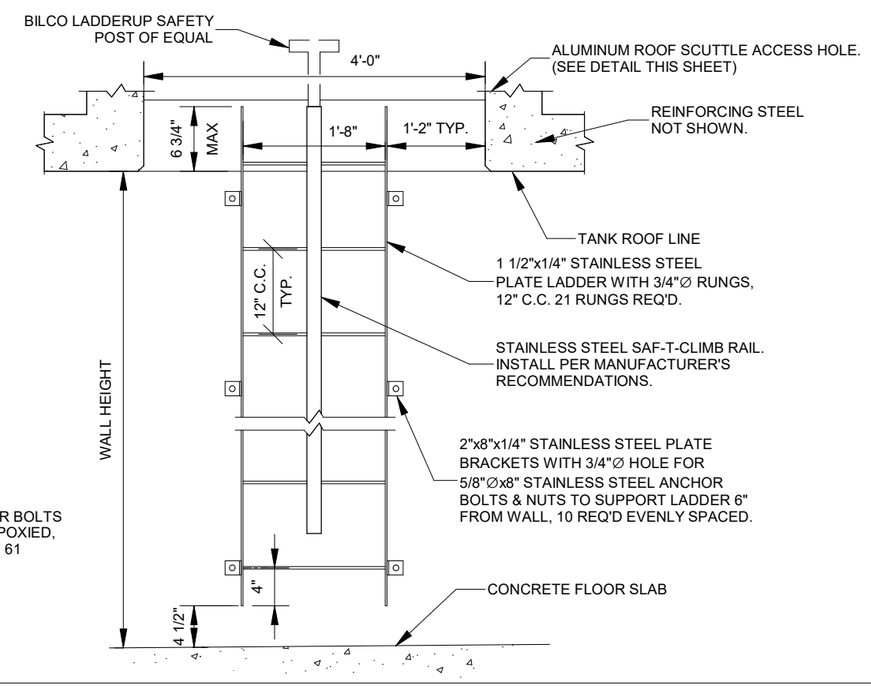

NOTE:
1. IF STAINLESS ANCHOR BOLTS ARE TO BE DRILLED & EPOXIED, EPOXY TO BE MEET NSF 61 STANDARDS.

A5 LADDER

3/4" = 1'-0"

NO.	DATE	REMARKS

REVISIONS

UPDATED: 8/16/2019 1:41:00 PM

DWG NAME: C:\Users\Ben Arrington\Documents\SPRINGVILLE-WATER TANK-Dec-18.dwg

SCALE: As indicated

Jones & DeMille Engineering, Inc.
CIVIL ENGINEERING - SURVEYING - TESTING
GIS - ENVIRONMENTAL
1.800.748.5275 www.jonesanddemille.com

PROJECT DESIGN ENGINEER: DATE:

APPROVAL RECOMM: APPROVED

QUALITY MANAGEMENT REVIEW: DATE:

SPRINGVILLE CITY

BARTHOLOMEW WATER TANK

TANK DETAILS

PROJECT NUMBER: 1802-207

UTAH
COUNTY

SHEET NO. SA502

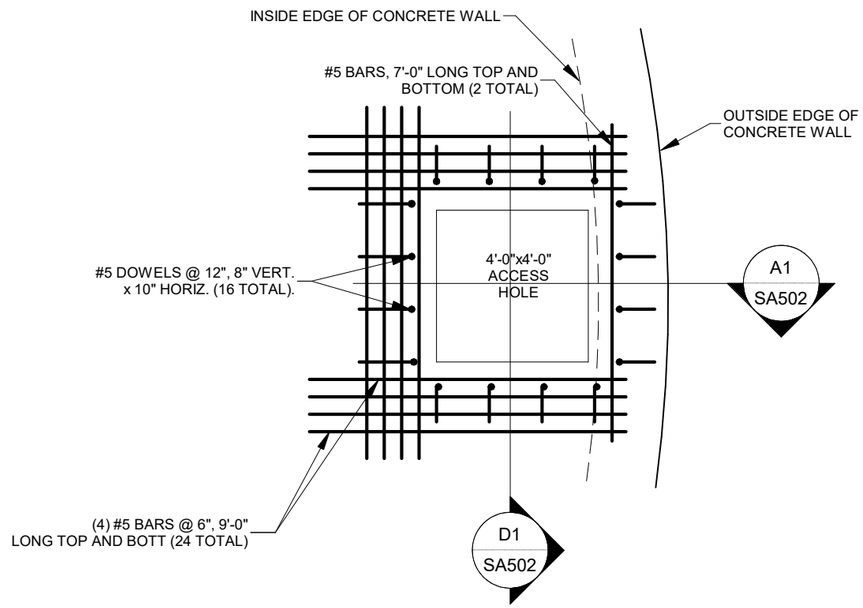

D1 ACCESS HOLE REINFORCEMENT - CAST-IN-PLACE ROOF

1/4" = 1'-0"

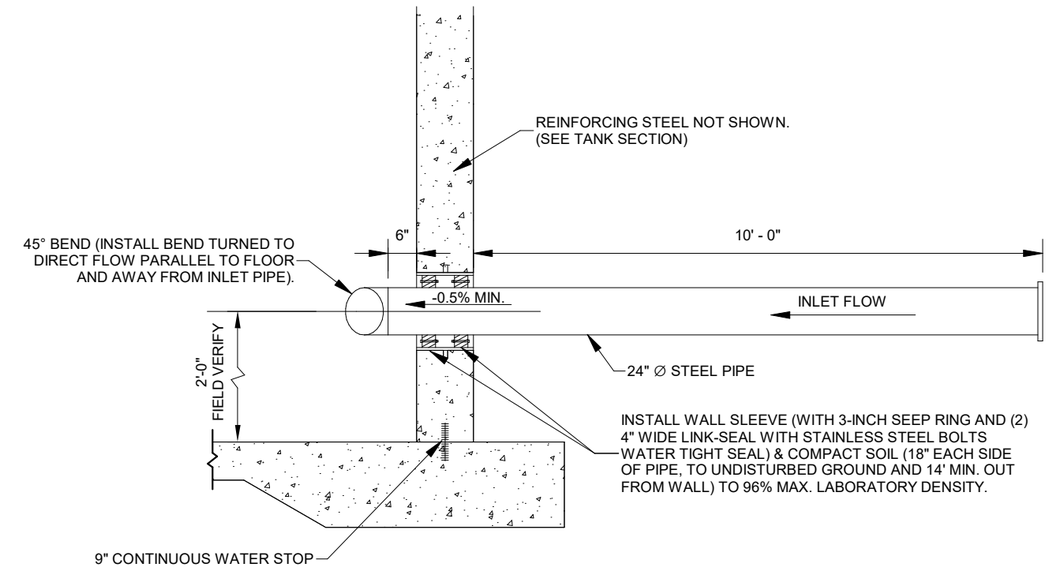

D5 INLET PIPING

NTS

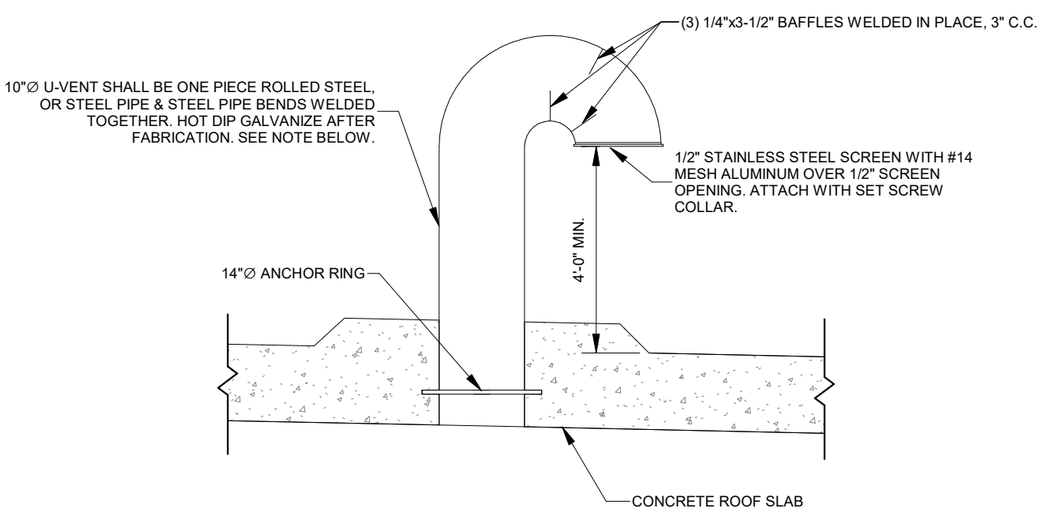

NOTE:
REINFORCING NOT SHOWN
(4) 10" Ø VENTS REQ'D ON TANK (SEE ROOF PLAN)

A1 U-VENT

3/4" = 1'-0"

NOTE:
1. REINFORCING STEEL NOT SHOWN
2. ALL NUTS AND BOLTS TO BE STAINLESS, FOLLOWERS TO BE EPOXY COATED.

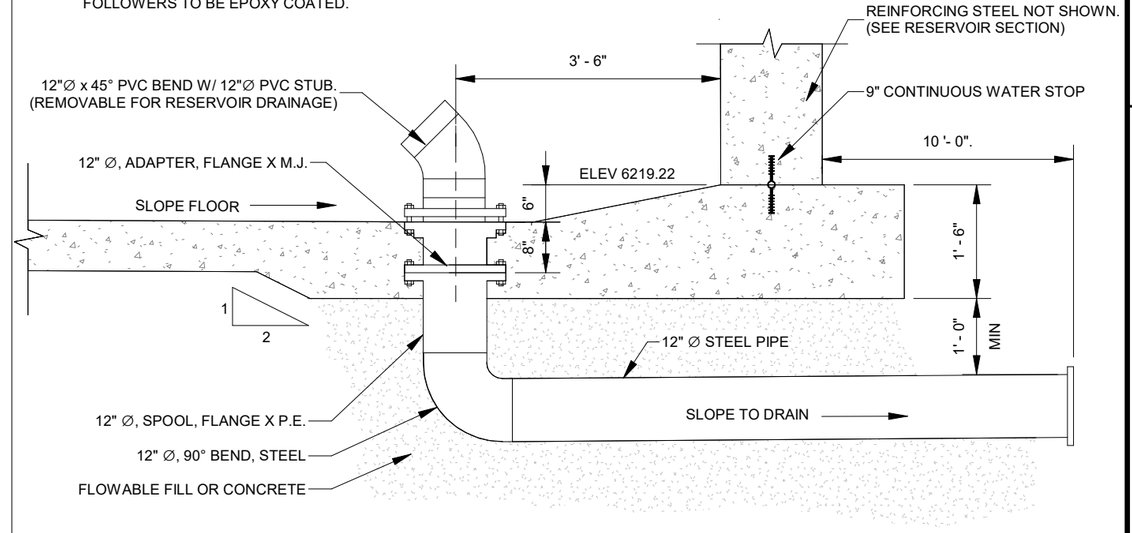

A5 12" DRAIN

1/2" = 1'-0"

NO.	DATE	REMARKS

REVISIONS

UPDATED: 8/16/2019 1:41:01 PM

DWG NAME: C:\Users\Ben Arrington\Documents\SPRINGVILLE-WATER TANK-psb.dwg

SCALE: As indicated

Jones & DeMille Engineering, Inc.
CIVIL ENGINEERING - SURVEYING - TESTING
GIS - ENVIRONMENTAL
1.800.748.5275 www.jonesanddemille.com

PROJECT DESIGN ENGINEER: DATE:

APPROVAL RECOMM: QUALITY MANAGEMENT REVIEW: DATE:

APPROVED

SPRINGVILLE CITY

BARTHOLOMEW WATER TANK

TANK DETAILS

PROJECT NUMBER: 1802-207

UTAH
COUNTY

SHEET NO. SA503

NOTE:
1. REINFORCING STEEL NOT SHOWN
2. ALL NUTS AND BOLTS TO BE STAINLESS, FOLLOWERS TO BE EPOXY COATED.
3. IF STAINLESS ANCHOR BOLTS ARE TO BE DRILLED & EPOXIED, EPOXY TO MEET NSF 61 STANDARDS.

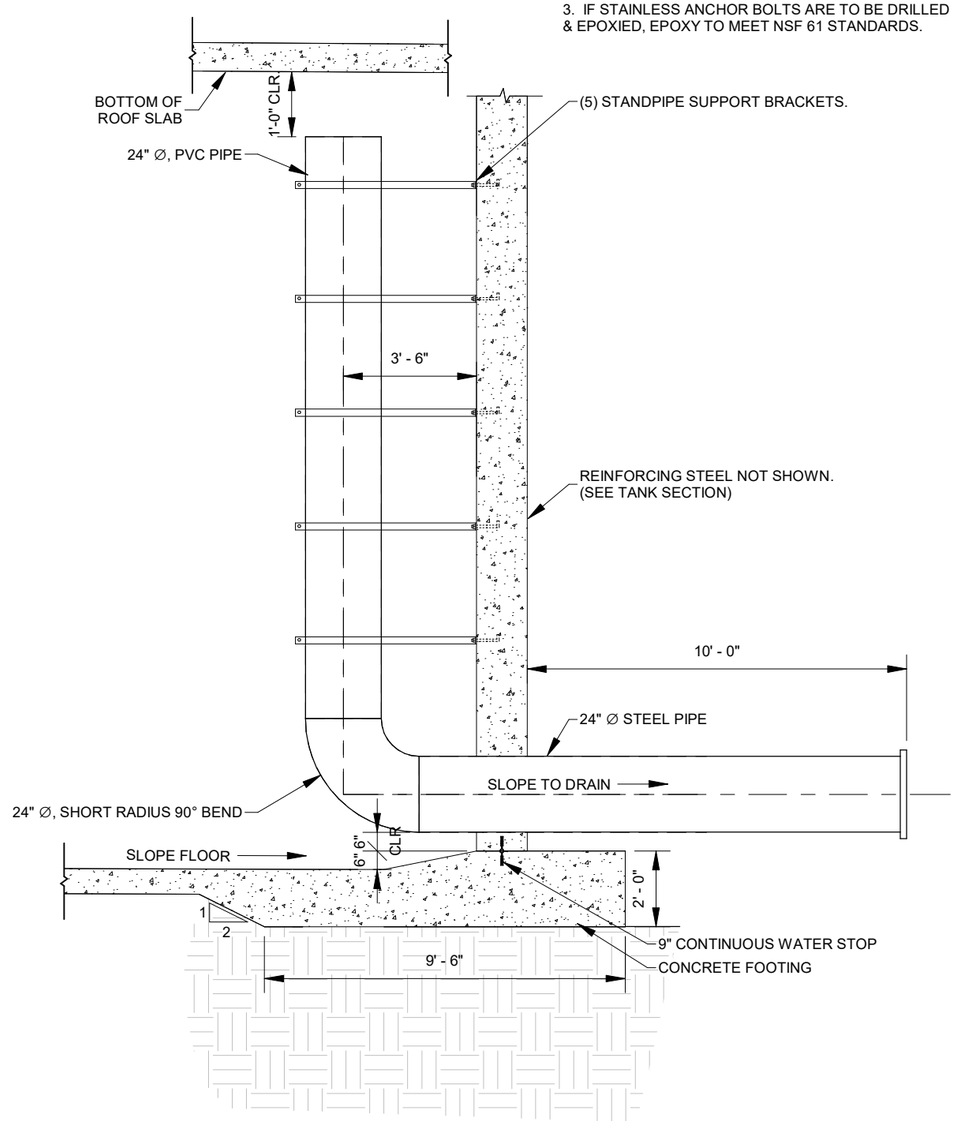

A1 OVERFLOW STANDPIPE

1/4" = 1'-0"

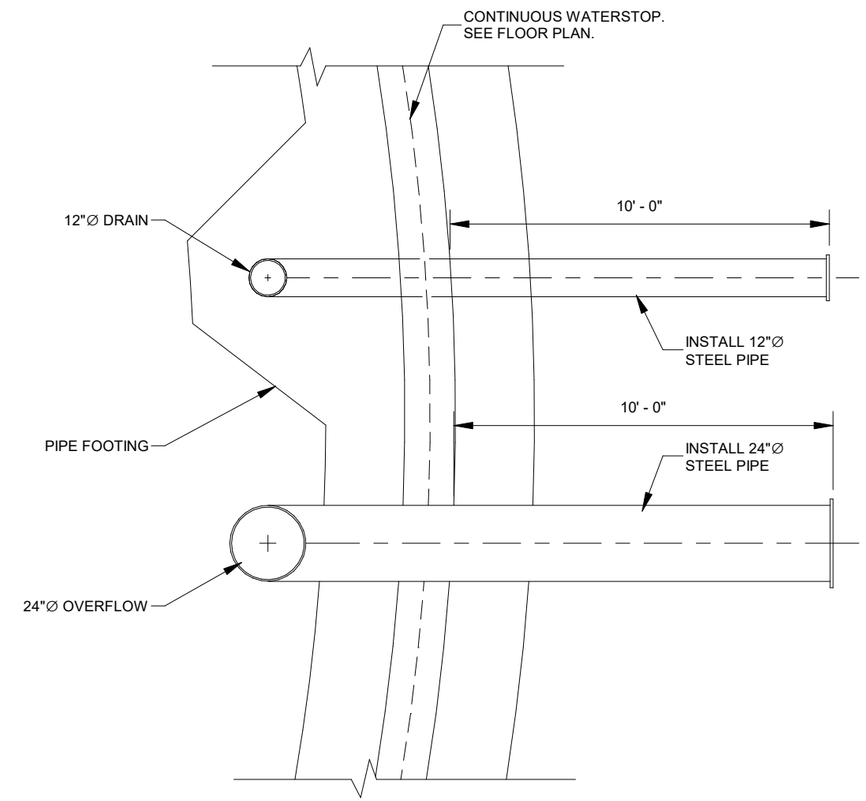

A5 DRAIN & OVERFLOW PLAN

1/4" = 1'-0"

NO.	DATE	REMARKS

REVISIONS

UPDATED: 8/16/2019 1:41:01 PM

DWG NAME: C:\Users\Ben Arrington\Documents\SPRINGVILLE-WATER TANK_Ben.dwg

SCALE: 1/4" = 1'-0"

Jones & DeMille Engineering, Inc.
CIVIL ENGINEERING - SURVEYING - TESTING
GIS - ENVIRONMENTAL
1.800.748.5275 www.jonesanddemille.com

APPROVAL RECOMM: PROJECT DESIGN ENGINEER DATE:

APPROVED: QUALITY MANAGEMENT REVIEW DATE:

SPRINGVILLE CITY

BARTHOLOMEW WATER TANK

TANK DETAILS

PROJECT NUMBER: 1802-207

UTAH
COUNTY

SHEET NO. SA504

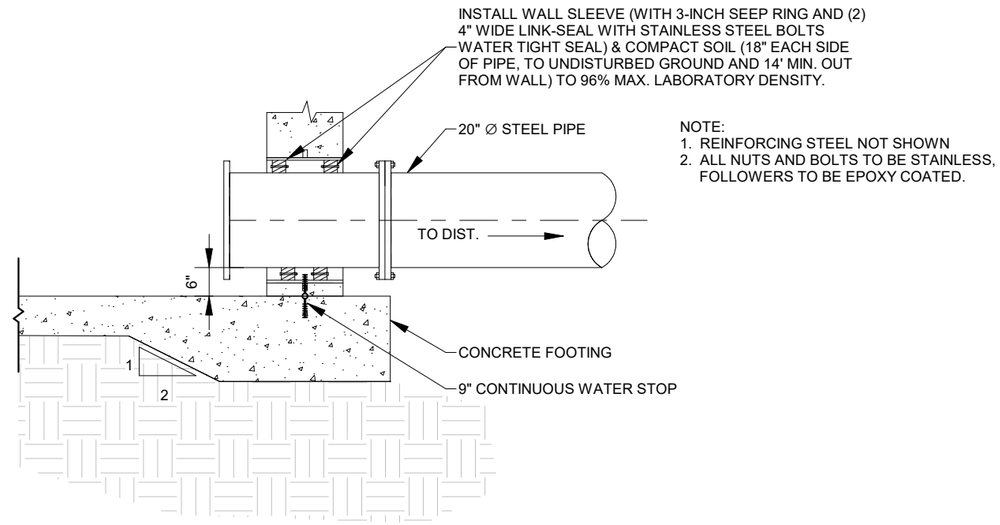

NOTE:
1. REINFORCING STEEL NOT SHOWN
2. ALL NUTS AND BOLTS TO BE STAINLESS, FOLLOWERS TO BE EPOXY COATED.

D1 OUTLET PIPE

3/8" = 1'-0"

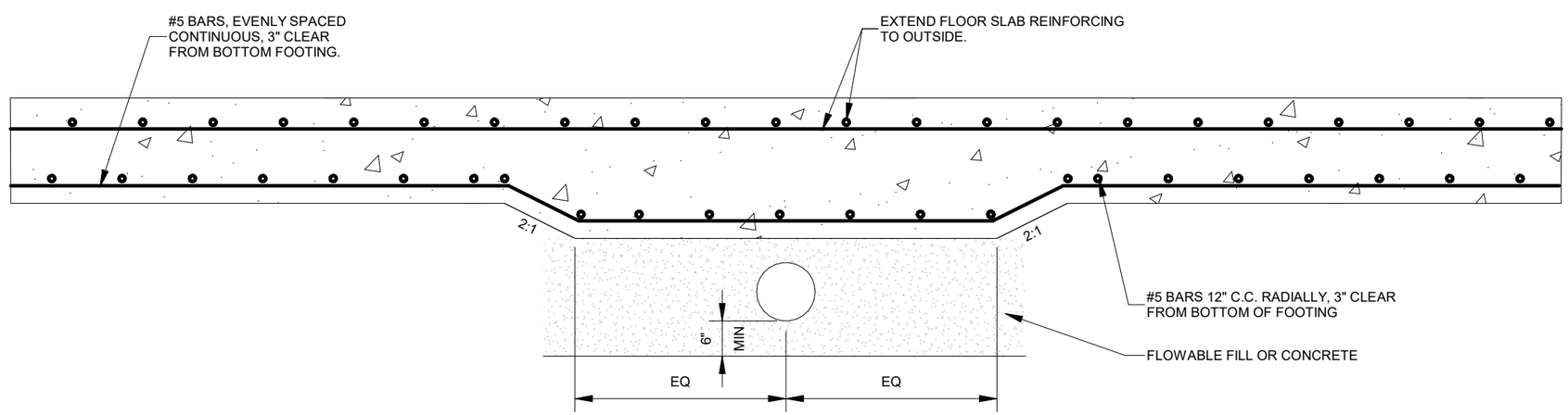

A1 PIPE FOOTING REINFORCEMENT

1/2" = 1'-0"

NO.	DATE	REMARKS

REVISIONS

UPDATED: 8/16/2019 1:41:01 PM

DWG NAME: C:\Users\Ben Arrington\Documents\SPRINGVILLE-WATER TANK_base.dwg

SCALE: As indicated

Jones & DeMille Engineering, Inc.
CIVIL ENGINEERING - SURVEYING - TESTING
GIS - ENVIRONMENTAL
1.800.748.5275 www.jonesanddemille.com

APPROVAL RECOMM: PROJECT DESIGN ENGINEER DATE:

APPROVED: QUALITY MANAGEMENT REVIEW DATE:

SPRINGVILLE CITY

BARTHOLOMEW WATER TANK

TANK DETAILS

PROJECT NUMBER: 1802-207

UTAH
COUNTY

SHEET NO. SA505

CONCRETE COLUMN SCHEDULE

MARK	COUNT	SIZE	VERT REINF	TIES	REMARKS
CC-1	9	22"	(12) #7 BARS	#5 SPIRAL 3" PITCH	ROUND COLUMN

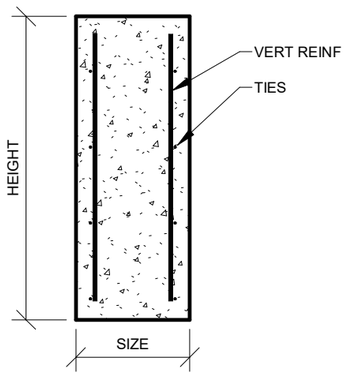

ELEVATION VIEW

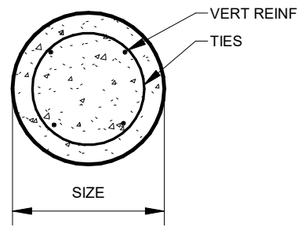

PLAN VIEW

NOTES:
1. ALL VERTICAL COLUMN REINFORCING SHALL BE TERMINATED WITH STANDARD 90º HOOKS AT BOTTOM

CONCRETE SLAB SCHEDULE

MARK	THICKNESS	TYPE	REINF	TOP MAT REINF	BOT MAT REINF	REMARKS
CS-1	8"	A	#5 @ 12" OC BW	N/A	N/A	FLOOR SLAB
CS-2	10"	B	N/A	#6 @ 8" OC BW	#6 @ 8" OC BW	ROOF SLAB

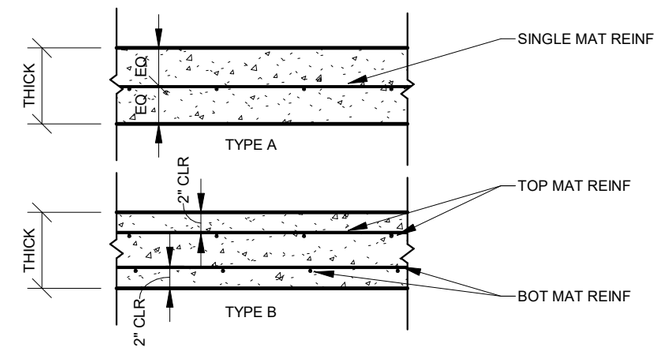

NOTES:
B.W. = BOTH WAYS

CONCRETE SLAB

CONCRETE WALL SCHEDULE

MARK	THICKNESS	HORIZ REINF	VERT REINF	TYPE	REMARKS
CW-1	1' - 4"	#6 @ 6" OC	#6 @ 8" OC	C	

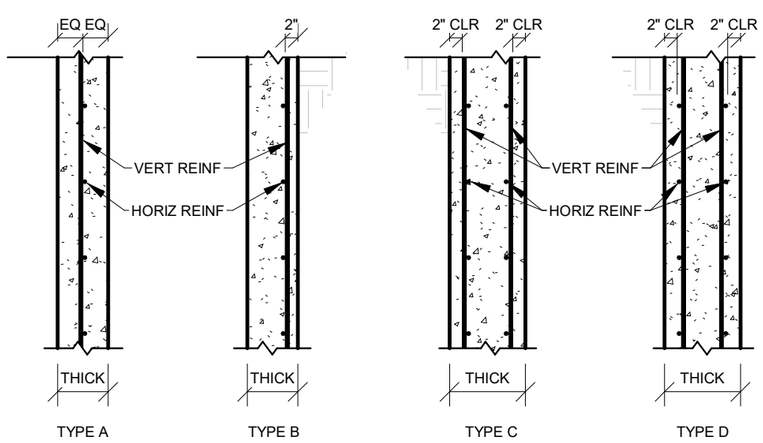

CONCRETE WALLS (SECTION VIEW)

NOTES:
E.F. = EACH FACE
O.F. = OUTSIDE FACE (AGAINST SOIL)
I.F. = INSIDE FACE

CONCRETE FOOTING SCHEDULE

MARK	WIDTH	LENGTH	THICK	LONG REINF	PERP REINF	REMARKS
CF-1	6' - 6"	6' - 6"	1' - 6"	#6 BARS @ 18" OC	#6 BARS @ 18" OC	
CF-2	3' - 0"	CONT. :"	1' - 6"	#6 BARS @ 12" OC	#6 BARS @ 12" OC	

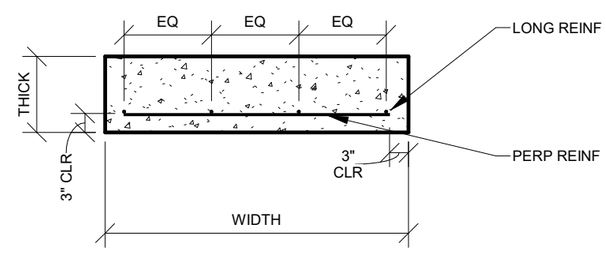

CONCRETE FOOTING

NO.	DATE	REMARKS

REVISIONS

UPDATED: 8/16/2019 1:41:01 PM

DWG NAME: C:\Users\Ben Arrington\Documents\SPRINGVILLE-WATER TANK.dwg

SCALE: As indicated

Jones & DeMille Engineering, Inc.
CIVIL ENGINEERING - SURVEYING - TESTING
GIS - ENVIRONMENTAL
1.800.748.5275 www.jonesanddemille.com

PROJECT DESIGN ENGINEER — DATE:

APPROVAL RECOMM: — DATE:

APPROVED — QUALITY MANAGEMENT REVIEW — DATE:

SPRINGVILLE CITY

BARTHOLOMEW WATER TANK

STRUCTURAL SCHEDULES

PROJECT NUMBER: 1802-207

UTAH
COUNTY

SHEET NO. SA601

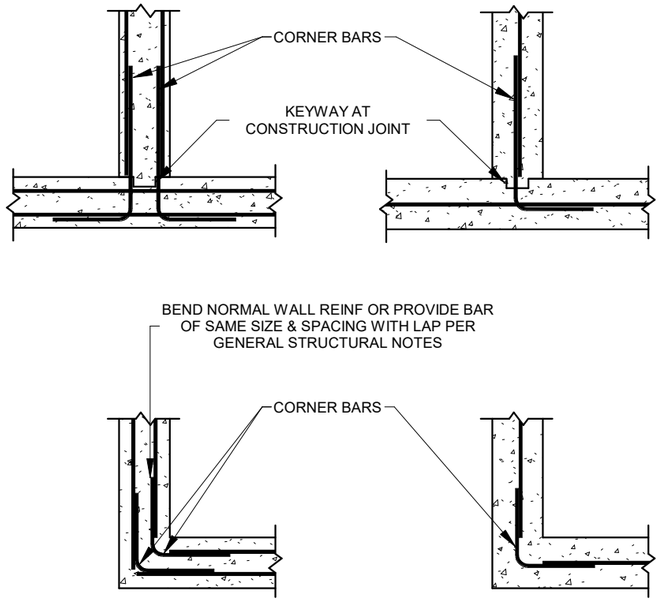

D1 REINFORCEMENT AT TYPICAL WALL CORNERS & INTERSECTION

1/2" = 1'-0"

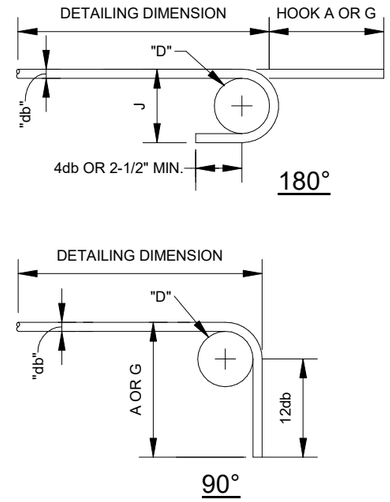

END HOOKS

BAR SIZE	D	180° HOOKS		90° HOOKS
		A OR G	J	A OR G
#3	2-1/4"	5"	3"	6"
#4	3"	6"	4"	8"
#5	3-3/4"	7"	5"	10"
#6	4-1/2"	8"	6"	1'-0"
#7	5-1/4"	10"	7"	1'-2"
#8	6	11"	8"	1'-4"
#9	9-1/2"	1'-3"	11-3/4"	1'-7"
#10	10-3/4"	1'-5"	1' 1-1/4"	1'-10"
#11	12"	1'-7"	1' 2-3/4"	2'-0"
#14	18-1/4"	2'-3"	1' 9-3/4"	2'-7"
#18	24"	3'-0"	2' 4-1/2"	3'-5"

D = FINISHED INSIDE BEND DIA.
db = NOMINAL BAR DIAMETER
Min. D = 6db FOR #3 THROUGH #8
= 8db FOR #9, #10, AND # 11
= 10db FOR #14, AND #18

D5 REINFORCING STEEL BEND

NTS

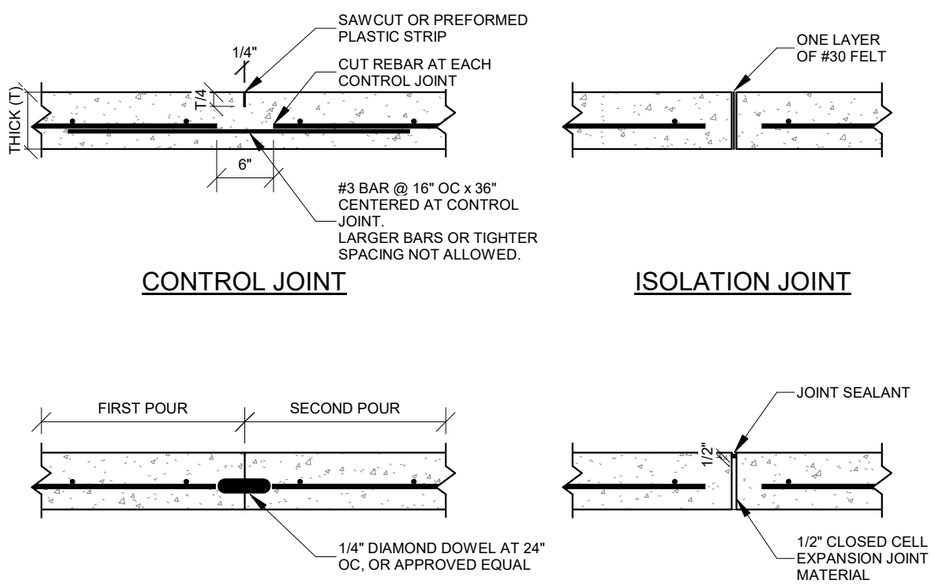

A1 CONCRETE JOINTS (SLABS)

NTS

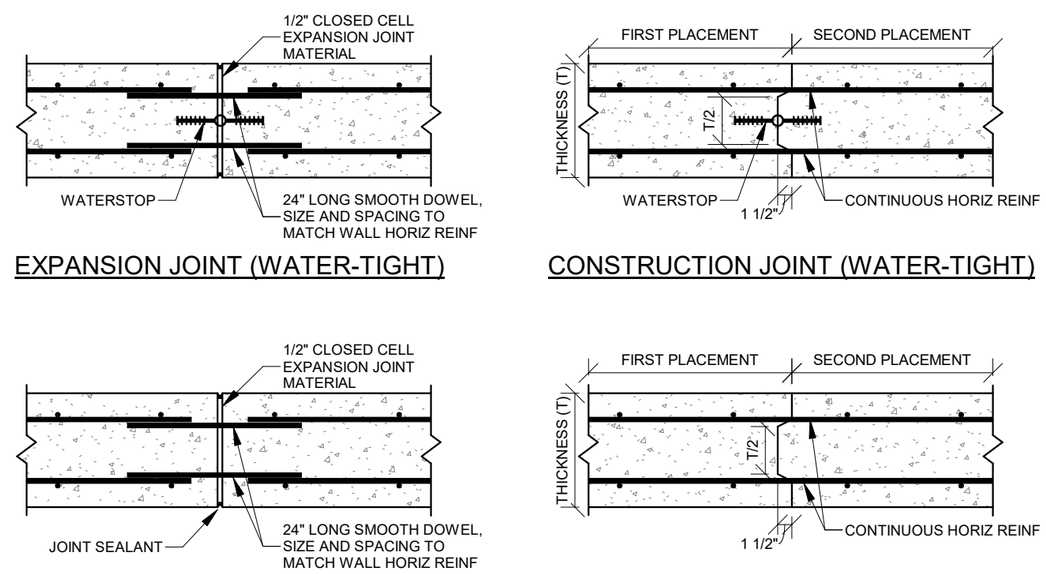

A5 CONCRETE JOINTS (WALLS)

NTS

NO.	DATE	REMARKS

REVISIONS

UPDATED: 8/16/2019 1:41:01 PM

DWG NAME: C:\Users\Ben Arrington\Documents\SPRINGVILLE-WATER TANK_base.dwg

SCALE: As indicated

Jones & DeMille Engineering, Inc.
CIVIL ENGINEERING - SURVEYING - TESTING
GIS - ENVIRONMENTAL
1.800.748.5275 www.jonesanddemille.com

PROJECT DESIGN ENGINEER: DATE:

APPROVAL RECOMM: QUALITY MANAGEMENT REVIEW: DATE:

APPROVED

SPRINGVILLE CITY

BARTHOLOMEW WATER TANK

STRUCTURAL TYPICAL DETAILS

PROJECT NUMBER: 1802-207

UTAH
COUNTY

SHEET NO. SA701

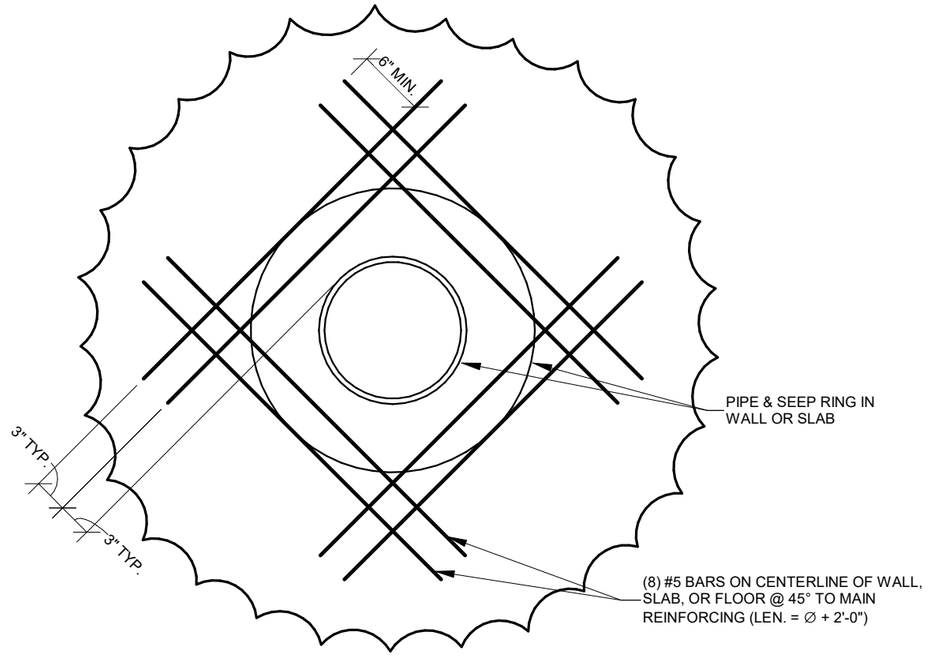

D1	TYPICAL PIPE PENETRATION THROUGH WALL / FLOOR / ROOF SLAB
NTS	

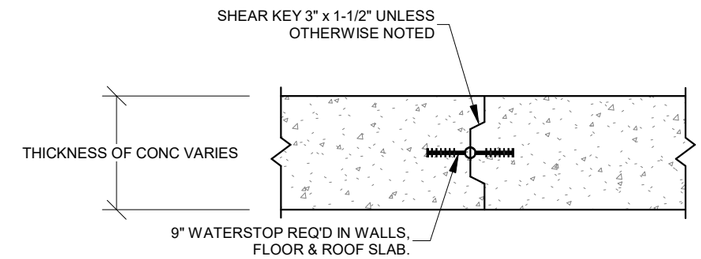

NOTE: TYPICAL FOR ALL CONSTRUCTION JOINTS

D5	CONCRETE JOINT DETAIL
NTS	

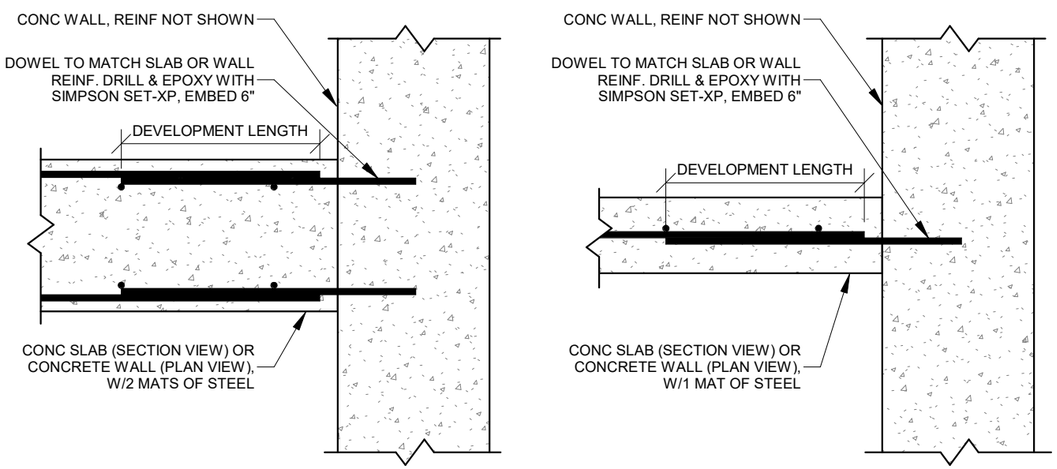

A1	REINFORCEMENT AT CONSTRUCTION JOINTS (EPOXY DOWEL OPTION)
NTS	

NO.	DATE	REMARKS

REVISIONS

UPDATED: 8/16/2019 1:41:01 PM

DWG NAME: C:\Users\Ben Arrington\Documents\SPRINGVILLE-WATER TANK_R19.dwg

SCALE: As indicated

Jones & DeMille Engineering, Inc.
CIVIL ENGINEERING - SURVEYING - TESTING
GIS - ENVIRONMENTAL
1.800.748.5275 www.jonesanddemille.com

APPROVAL RECOMM: PROJECT DESIGN ENGINEER DATE:

APPROVED: QUALITY MANAGEMENT REVIEW DATE:

SPRINGVILLE CITY

BARTHOLOMEW WATER TANK

STRUCTURAL TYPICAL DETAILS

PROJECT NUMBER: 1802-207

UTAH
COUNTY

SHEET NO. SA702

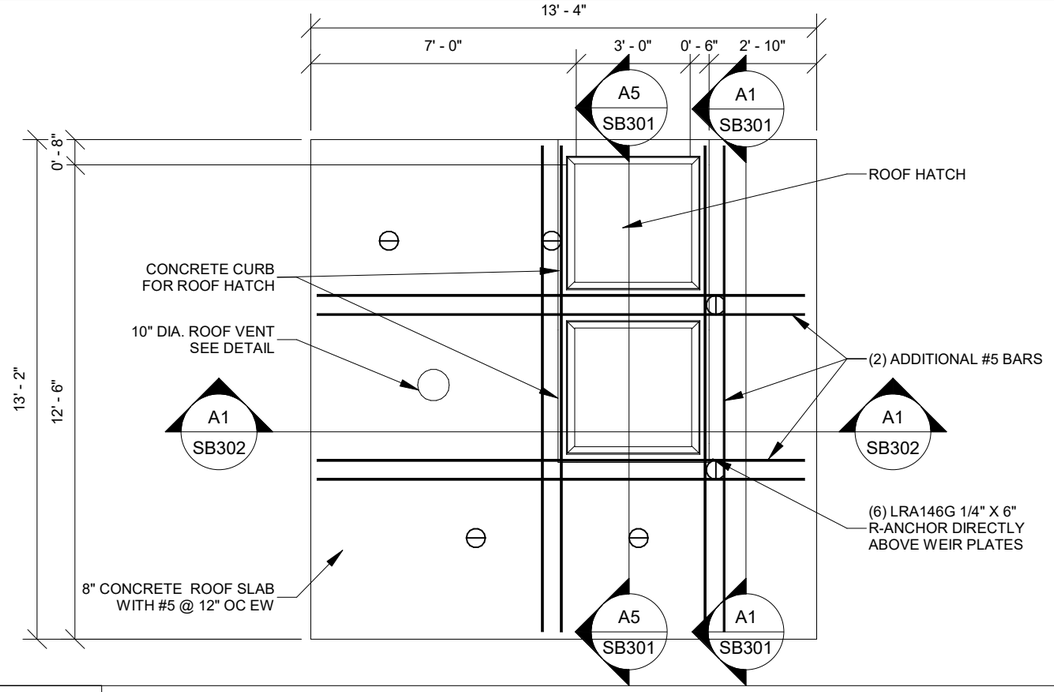

D5 ROOF PLAN

1/4" = 1'-0"

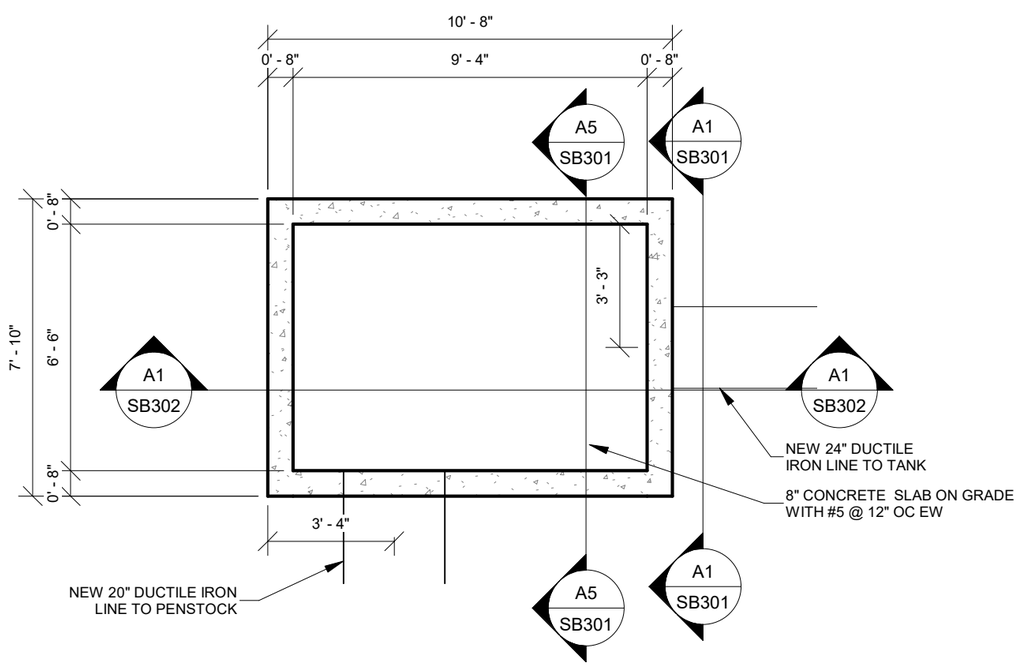

A1 FOUNDATION PLAN

1/4" = 1'-0"

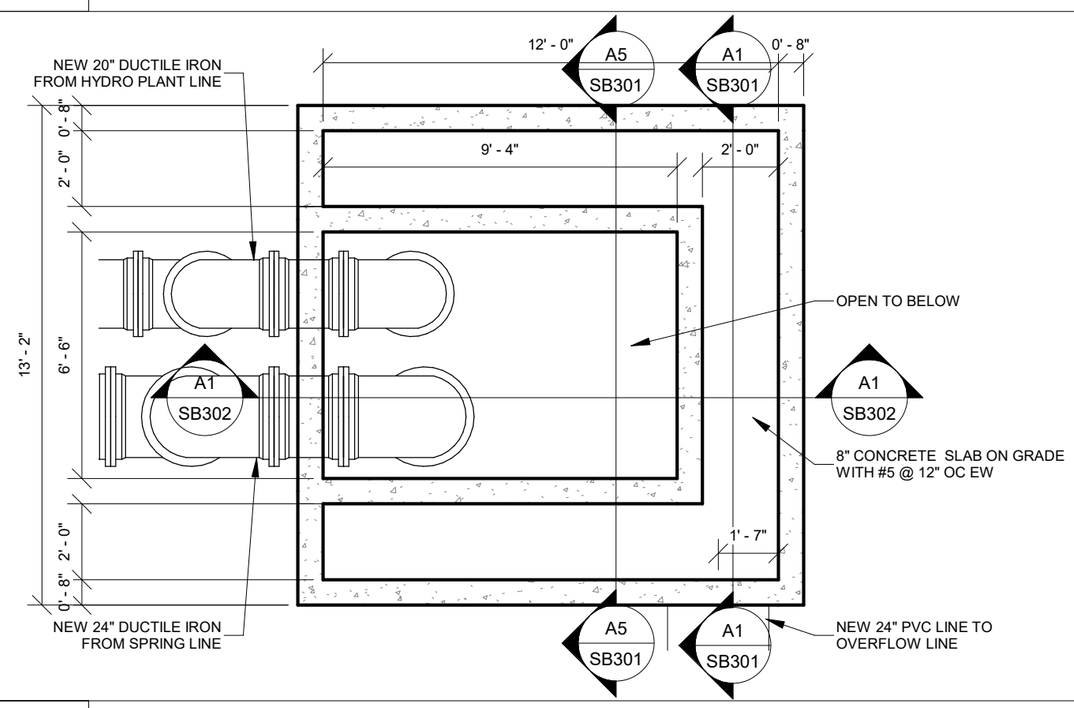

A5 OVERFLOW FLOOR PLAN

1/4" = 1'-0"

NO.	DATE	REMARKS

REVISIONS

UPDATED: 7/31/2019 2:14:41 PM

DWG NAME: H:\JDProj\1802-207\dwg\Revit\Overflow Weir.rvt

SCALE: 1/4" = 1'-0"

Jones & DeMille Engineering, Inc.
CIVIL ENGINEERING - SURVEYING - TESTING
GIS - ENVIRONMENTAL
1.800.748.5275 www.jonesanddemille.com

APPROVAL RECOMM: PROJECT DESIGN ENGINEER DATE:

APPROVED QUALITY MANAGEMENT REVIEW DATE:

SPRINGVILLE CITY

BARTHOLOMEW WATER TANK

WEIR BOX PLANS

PROJECT NUMBER: 1802-207

UTAH
COUNTY

SHEET NO. SB101

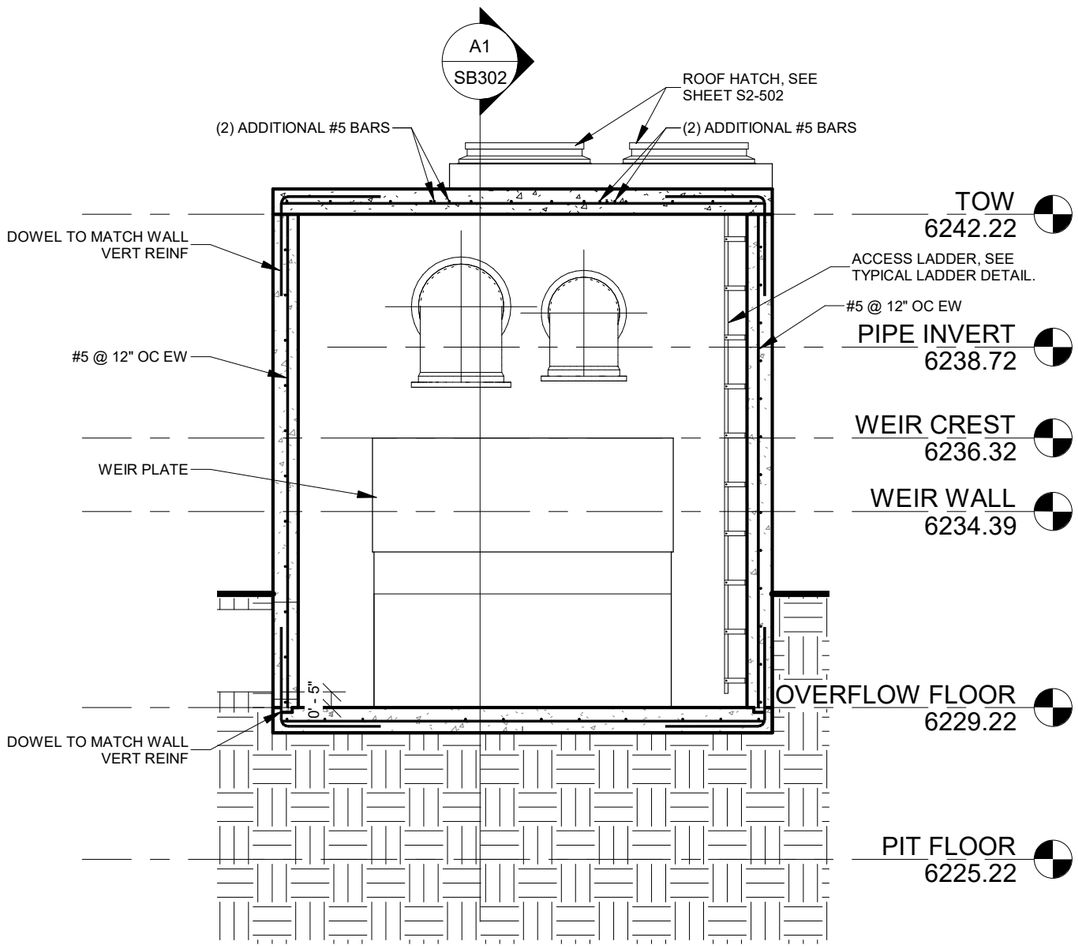

A1 SECTION

1/4" = 1'-0"

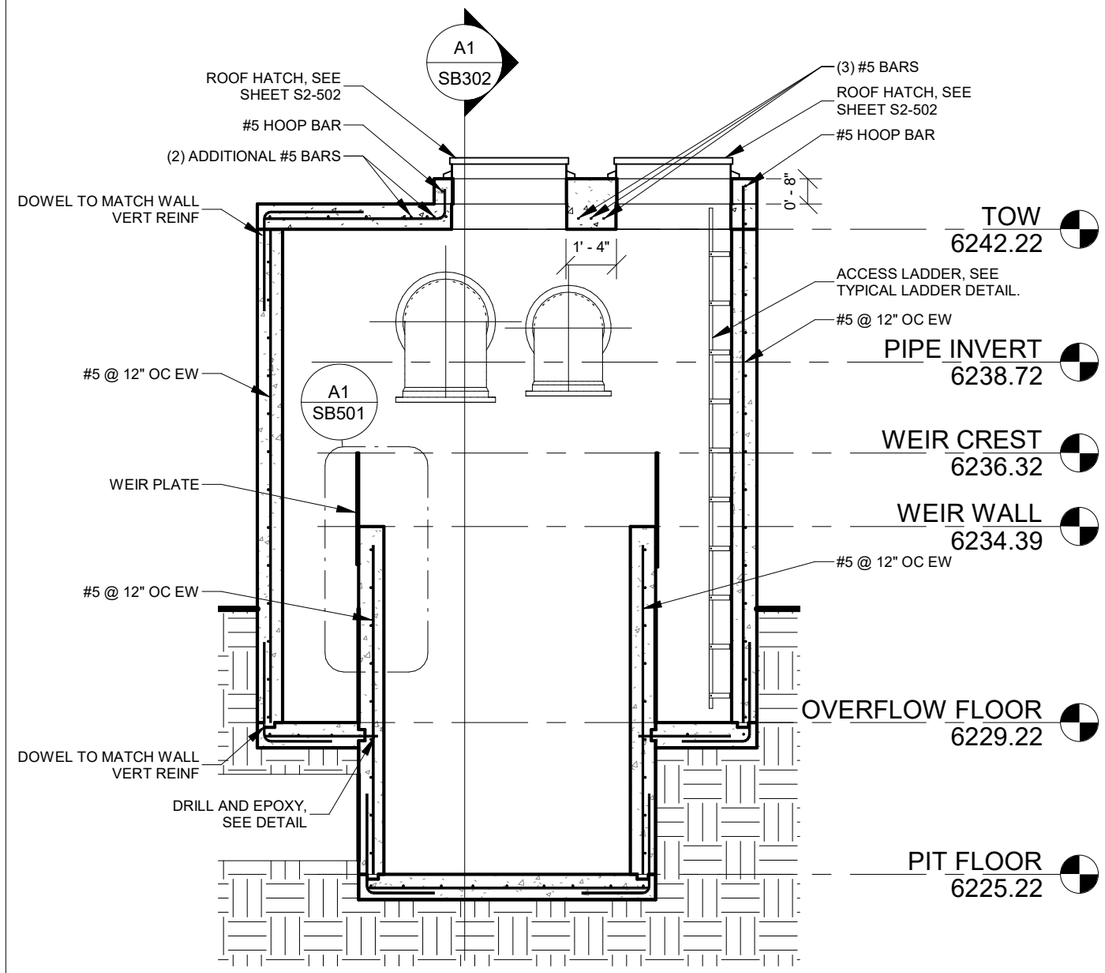

A5 SECTION

1/4" = 1'-0"

NO.	DATE	REMARKS

REVISIONS

UPDATED: 7/31/2019 2:14:42 PM

DWG NAME: H:\JDProj\1802-207\dwg\Revit\Overflow Weir.rvt

SCALE: 1/4" = 1'-0"

Jones & DeMille Engineering, Inc.
CIVIL ENGINEERING - SURVEYING - TESTING
GIS - ENVIRONMENTAL
1.800.748.5275 www.jonesanddemille.com

APPROVAL RECOMM: PROJECT DESIGN ENGINEER DATE:

APPROVED: QUALITY MANAGEMENT REVIEW DATE:

SPRINGVILLE CITY

BARTHOLOMEW WATER TANK

WEIR BOX SECTIONS

PROJECT NUMBER: 1802-207

UTAH
COUNTY

SHEET NO. SB301

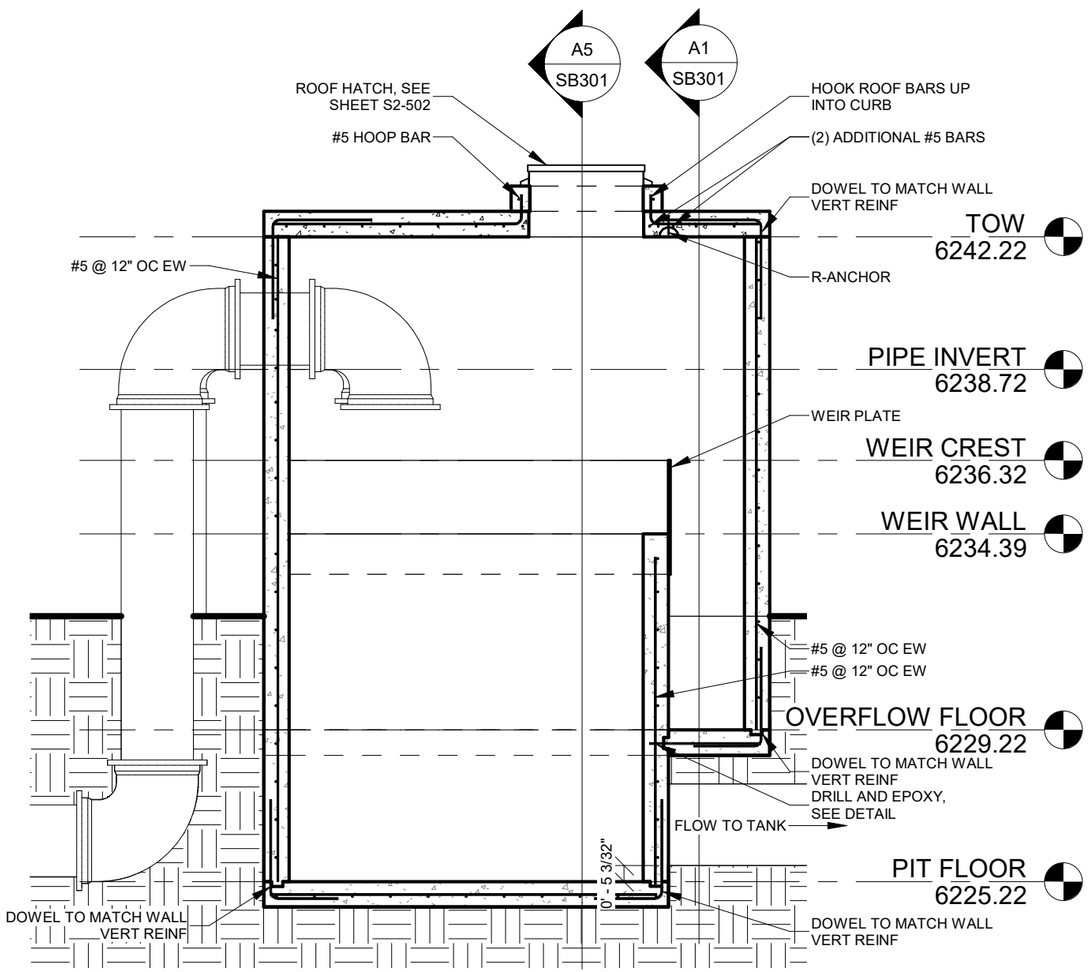

A1 SECTION

1/4" = 1'-0"

NO.	DATE	REMARKS

REVISIONS

UPDATED: 7/31/2019 2:14:42 PM

DWG NAME: H:\JDProj\1802-207\dwg\Revit\Overflow Weir.rvt

SCALE: 1/4" = 1'-0"

Jones & DeMille Engineering, Inc.
CIVIL ENGINEERING - SURVEYING - TESTING
GIS - ENVIRONMENTAL
1.800.748.5275 www.jonesanddemille.com

APPROVAL RECOMM: PROJECT DESIGN ENGINEER DATE:

APPROVED QUALITY MANAGEMENT REVIEW DATE:

SPRINGVILLE CITY

BARTHOLOMEW WATER TANK

WEIR BOX SECTIONS

PROJECT NUMBER: 1802-207

UTAH
COUNTY

SHEET NO. SB302

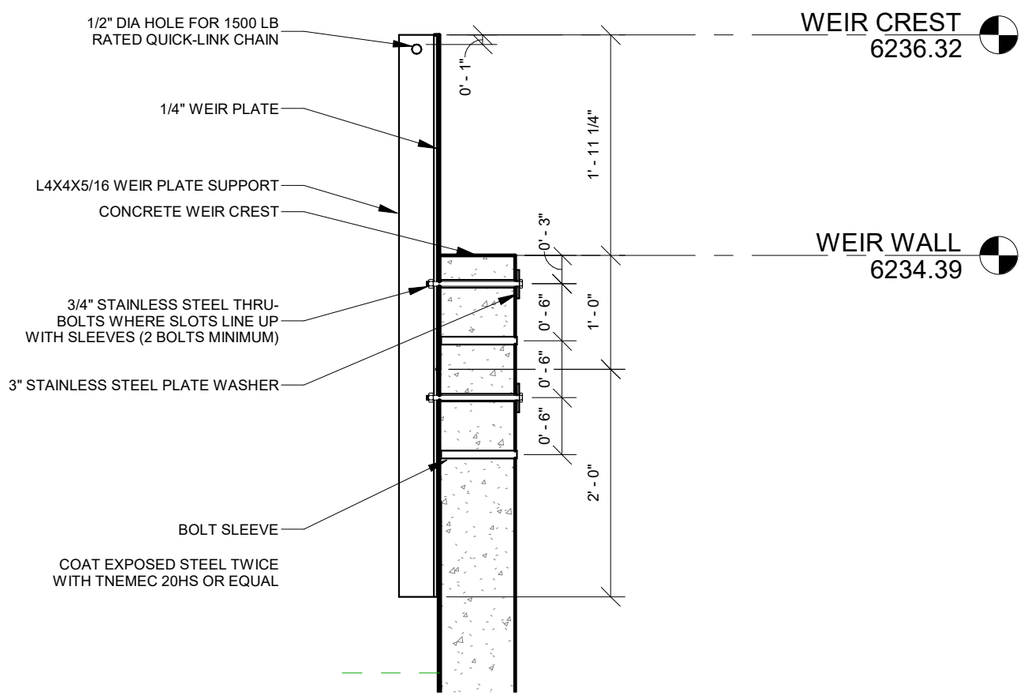

A1 WEIR PLATE

3/4" = 1'-0"

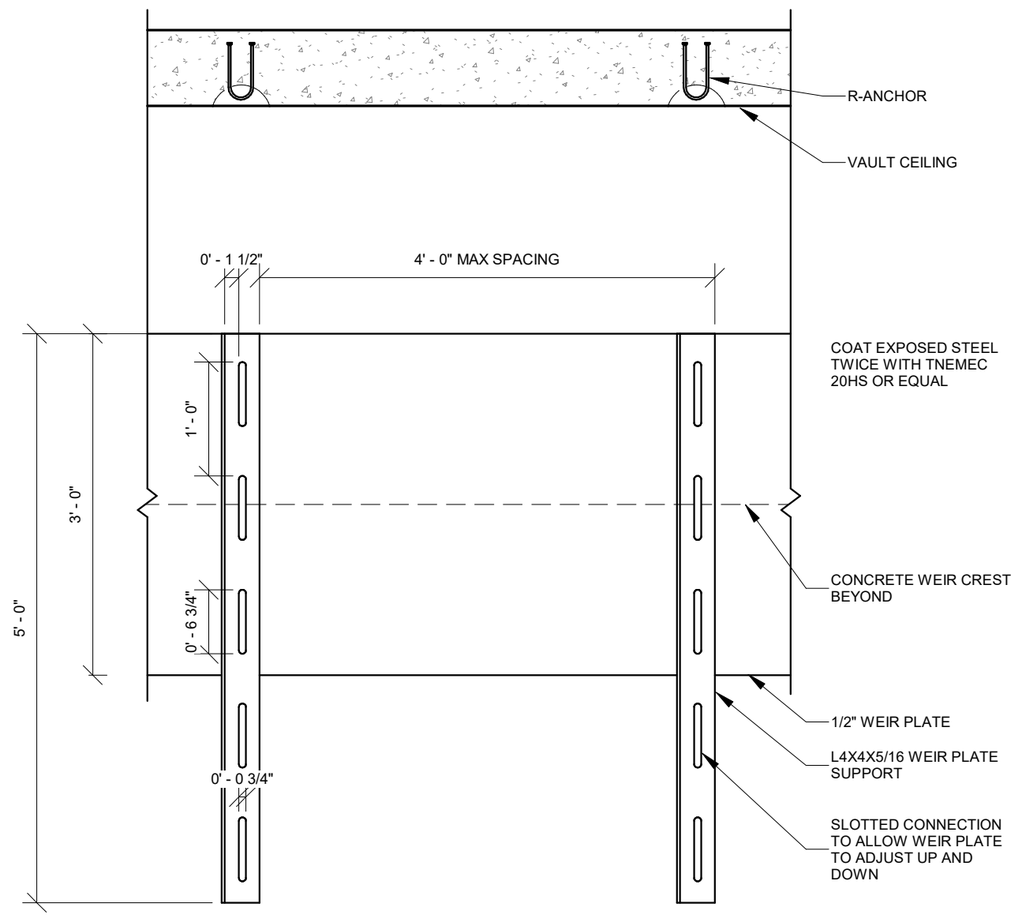

A5 WEIR PLATE BRACKET

3/4" = 1'-0"

NO.	DATE	REVISIONS	REMARKS

SCALE: 3/4" = 1'-0"

DWG NAME: H:\JDProj\1802-207\dwg\Revit\Overflow Weir.rvt

UPDATED: 7/31/2019 2:14:42 PM

Jones & DeMille Engineering, Inc.
CIVIL ENGINEERING - SURVEYING - TESTING
GIS - ENVIRONMENTAL
1.800.748.5275 www.jonesanddemille.com

PROJECT DESIGN ENGINEER DATE:

QUALITY MANAGEMENT REVIEW DATE:

APPROVAL RECOMM: APPROVED

SPRINGVILLE CITY

BARTHOLOMEW WATER TANK

STRUCTURAL DETAILS

PROJECT NUMBER: 1802-207

UTAH
COUNTY

SHEET NO. SB501

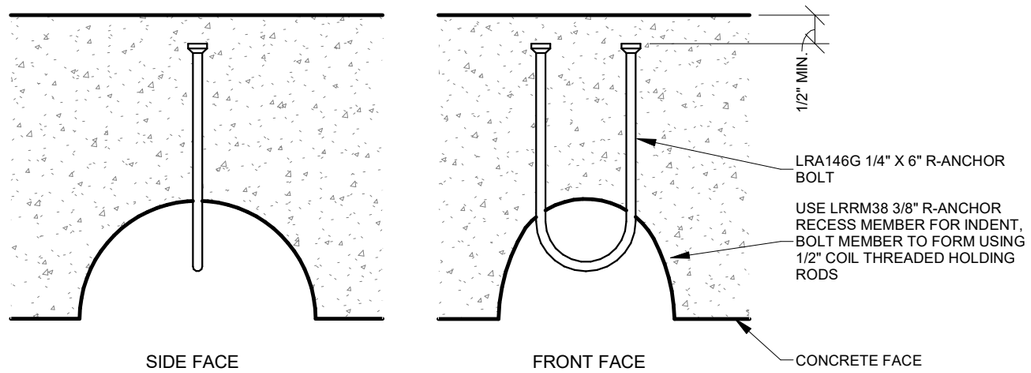

D1 R-ANCHOR DETAIL

NTS

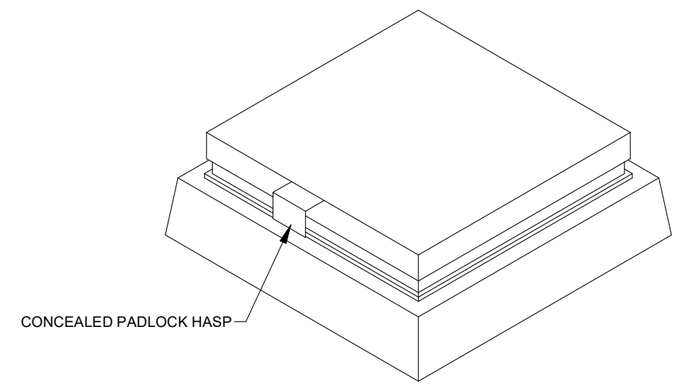

D5 ACCESS HOLE 3D VIEW

NTS

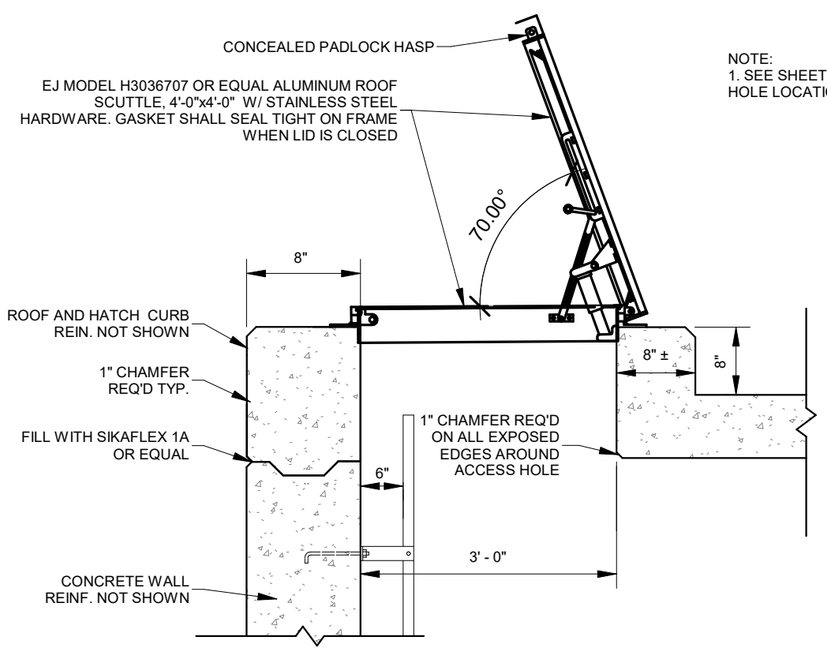

NOTE:
1. SEE SHEET S2-101 FOR ACCESS HOLE LOCATION.

A1 ACCESS HOLE DETAIL

NTS

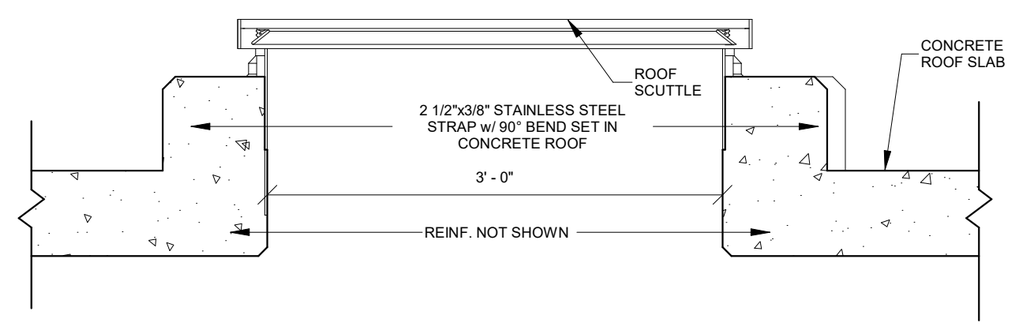

A5 ACCESS HOLE SECTION

NTS

NO.	DATE	REMARKS

REVISIONS

UPDATED: 7/31/2019 2:14:42 PM

DWG NAME: H:\JDProj\1802-207\dwg\Revit\Overflow Weir.rvt

SCALE: As indicated

Jones & DeMille Engineering, Inc.
CIVIL ENGINEERING - SURVEYING - TESTING
GIS - ENVIRONMENTAL
1.800.748.5275 www.jonesanddemille.com

APPROVAL RECOMM: PROJECT DESIGN ENGINEER DATE:

APPROVED QUALITY MANAGEMENT REVIEW DATE:

SPRINGVILLE CITY

BARTHOLOMEW WATER TANK

STRUCTURAL DETAILS

PROJECT NUMBER: 1802-207

UTAH COUNTY

SHEET NO. SB502

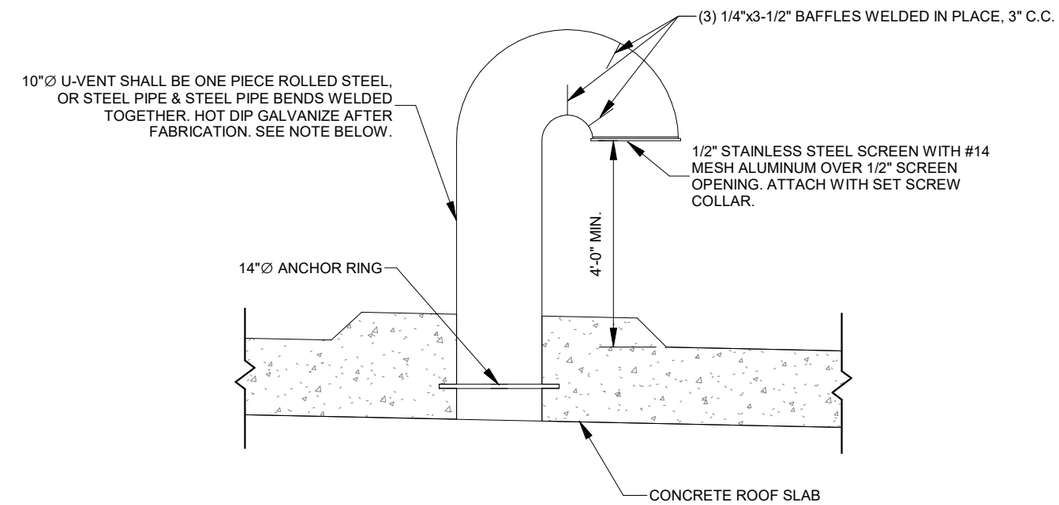

NOTE:
REINFORCING NOT SHOWN
(1) 10" Ø VENTS REQ'D ON OVERFLOW WEIR STRUCTURE (SEE ROOF PLAN)

D5	U-VENT
NTS	

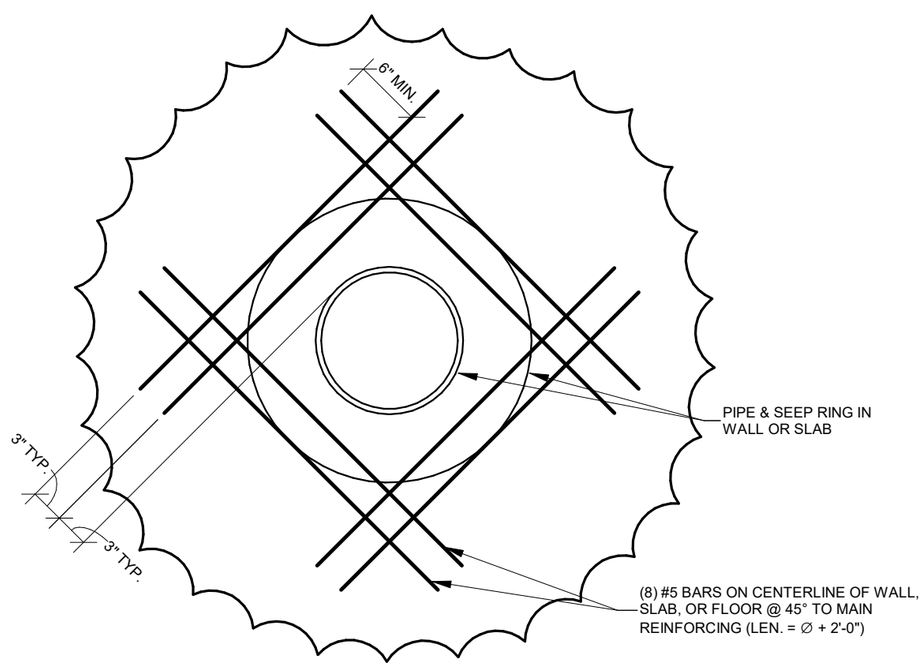

A1	TYPICAL PIPE PENETRATION THROUGH WALL / FLOOR / ROOF SLAB
NTS	

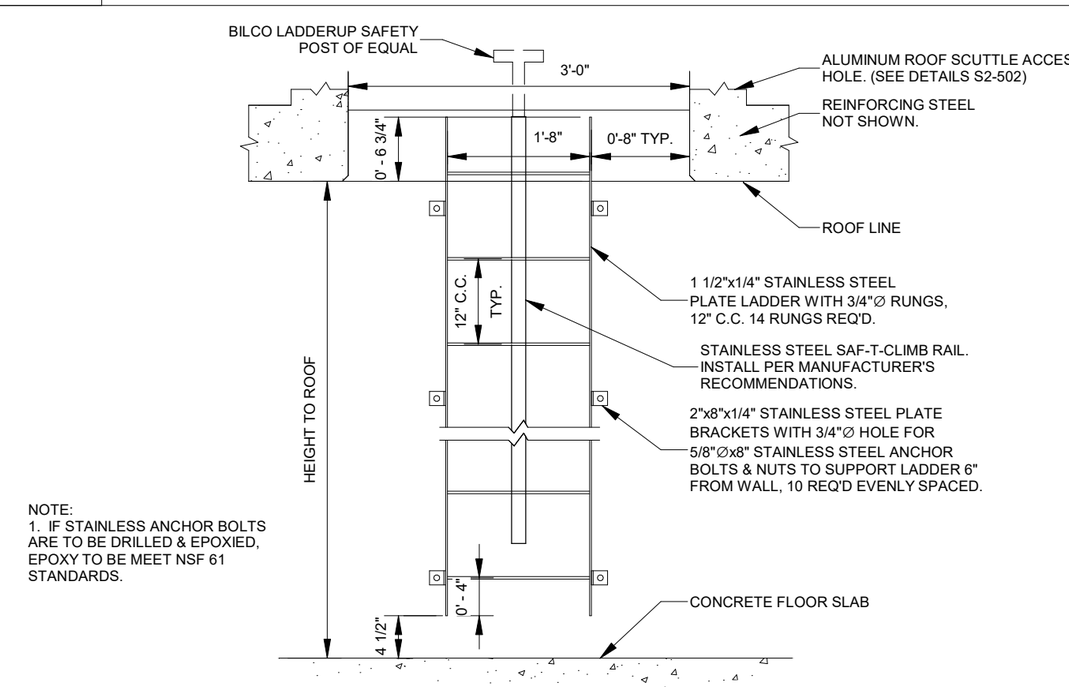

NOTE:
1. IF STAINLESS ANCHOR BOLTS ARE TO BE DRILLED & EPOXIED, EPOXY TO BE MEET NSF 61 STANDARDS.

A5	TYPICAL LADDER
NTS	

NO.	DATE	REMARKS

REVISIONS

UPDATED: 7/31/2019 2:14:42 PM

DWG NAME: H:\DJProj\1802-207\dwg\RevitOverflow Weir.rvt

SCALE: As indicated

Jones & DeMille Engineering, Inc.
CIVIL ENGINEERING - SURVEYING - TESTING
GIS - ENVIRONMENTAL
1.800.748.5275 www.jonesanddemille.com

PROJECT DESIGN ENGINEER DATE:
APPROVAL RECOMM: APPROVED QUALITY MANAGEMENT REVIEW DATE:

SPRINGVILLE CITY
BARTHOLOMEW WATER TANK
STRUCTURAL DETAILS

PROJECT NUMBER: 1802-207

UTAH
COUNTY

SHEET NO. SB503

GENERAL DRAWING SYMBOLS AND REFERENCES

THIS IS A STANDARD LEGEND NOT ALL SYMBOLS MAY BE USED ON THIS PROJECT

1	REFERENCE NOTE
1	DEMOLITION NOTE
NO	REVISION NOTE
1	IDENTIFICATION NOTE
NO	PHOTO REFERENCE
XX / XX	EQUIPMENT REFERENCE
WIRE	WIRE SIZE REFERENCE
PHOTO XXX XXXX	PHOTO REFERENCE
A	SECTION/ELEVATION REFERENCE
XXX-XXX	EQUIPMENT ID TAG

PLAN SYMBOLS

THIS IS A STANDARD LEGEND NOT ALL SYMBOLS MAY BE USED ON THIS PROJECT

EQUIPMENT	
	CIRCUIT DISTRIBUTION PANELBOARD SURFACE MOUNTED
	CIRCUIT DISTRIBUTION PANELBOARD RECESSED
	POWER DISTRIBUTION PANELBOARD SURFACE OR FLOOR MOUNTED DOORS DESIGNATE FRONT OF PANEL MDP DESIGNATES MAIN DISTRIBUTION PANEL
	CONTROL PANEL ENCLOSURE
	LIGHTING CONTROL PANEL
	DISCONNECT
HVAC EQUIPMENT	
	UNIT HEATER, WALL MOUNTED
	UNIT HEATER, CEILING MOUNTED
	CONDENSING UNIT, PAD MOUNTED, SIDE DISCHARGE
	CONDENSING UNIT, PAD MOUNTED, UP FLOW
	ROOFTOP MOUNTED EQUIPMENT

CONDUIT AND RACEWAYS

THIS IS A STANDARD LEGEND NOT ALL SYMBOLS MAY BE USED ON THIS PROJECT

	RACEWAY OR WIRING SYSTEM IN OR UNDER FLOOR OR CONCEALED IN WALL OR BEHIND STRUCTURE OR EQUIPMENT OR CONDUIT ROUTED BELOW GRADE IN CONCRETE ENCASEMENT
	FLEX CONDUIT
	RACEWAY OR WIRING SYSTEM ABOVE FLOOR LEVEL BELOW CEILING, EXPOSED
	HOMERUN: DESIGNATIONS INDICATE A ONE-LINE DIAGRAM OR PANELBOARD SCHEDULE REFERENCE
J	JUNCTION BOX
	RACEWAY OR WIRING SYSTEM TURNED TOWARD THE VIEWER (UP ON PLAN DRAWINGS)
	RACEWAY OR WIRING SYSTEM TURNED AWAY FROM THE VIEWER (DOWN ON PLAN DRAWINGS)
	RACEWAY OR WIRING SYSTEM CHANGE IN ELEVATION OR DISTANCE FROM VIEWER
	CONDUIT STUB AND CAP

POWER ONE-LINE SYMBOLS

THIS IS A STANDARD LEGEND NOT ALL SYMBOLS MAY BE USED ON THIS PROJECT

	POWER FEED
	UTILITY METERING CURRENT TRANSFORMER
M	COMBO UTILITY METER SOCKET AND CIRCUIT BREAKER
M	EXISTING UTILITY METERING SOCKET
WIRE	CONDUCTOR WITH CALLOUT REFERENCE (SEE CONDUIT/CONDUCTOR SCHEDULE)
	CONNECTION POINT
	LUG
	CIRCUIT BREAKER
PNL	EXISTING POWER DISTRIBUTION PANEL
PNL	POWER DISTRIBUTION PANEL
	TRANSFER SWITCH ATS: AUTOMATIC TRANSFER SWITCH MTS: MANUAL TRANSFER SWITCH
	GENERATOR
	POWER (POTENTIAL) TRANSFORMER
	EQUIPMENT GROUND CONNECTION
HP	MOTOR (HP SHOWN)
VFD	VARIABLE FREQUENCY DRIVE MOTOR CONTROLLER

EQUIPMENT GROUNDING CONDUCTORS

FUSE OR CB SIZE	SIZE (COPPER)
15	14
20	12
30	10
40	10
60	10
100	8
200	6
300	4
400	3
500	2
600	1
800	1/0
1000	2/0
1200	3/0
1600	4/0
2000	250
2500	350

H.P.E. INC. ELECTRICAL ENGINEERS
POWER SYSTEMS, CONTROL & INSTRUMENTATION SYSTEMS
HEGERHORST POWER ENGINEERING INCORPORATED (801) 642-2051
708 EAST 50 SOUTH FAX (801) 642-2154
AMERICAN FORK, UT 84003
HPE PROJECT 18023

©2018
FOR INFORMATION ABOUT THIS JOB, PLEASE CONTACT: KEITH HEGERHORST

GENERAL NOTES:

1. VERIFY ALL EQUIPMENT DIMENSIONS AND LOCATIONS BEFORE BEGINNING ROUGH-IN. CONSULT ALL APPLICABLE CONTRACT DRAWINGS AND SHOP DRAWINGS TO ENSURE NEC CODE CLEARANCE REQUIRED AROUND ALL ELECTRICAL EQUIPMENT.
2. CONTRACTOR SHALL VERIFY ALL ELECTRICAL LOADS (VOLTAGE, PHASE, CONNECTION REQUIREMENTS, ETC.) OF EQUIPMENT FURNISHED BEFORE BEGINNING ROUGH-IN.
3. SEE APPLICABLE SHOP DRAWINGS FOR ROUGH-IN LOCATION OF ALL EQUIPMENT, WIRING DEVICES, ETC.
4. THE ELECTRICAL CONTRACTOR SHALL NOTIFY AND COOPERATE WITH THE MECHANICAL CONTRACTOR SUCH THAT NO PIPING, OR EQUIPMENT FOREIGN TO THE OPERATION OF THE ELECTRICAL EQUIPMENT SHALL BE PERMITTED TO BE INSTALLED IN, ENTER OR PASS THROUGH ELECTRICAL ROOMS OR SPACES; OR ABOVE OR BELOW ELECTRICAL EQUIPMENT IN THE OTHER AREAS.
5. ALL PENETRATIONS OF FLOORS, WALLS AND CEILINGS SHALL BE SEALED WITH APPROVED MATERIAL.
6. FOR PACKAGE EQUIPMENT PROVIDED ON THE PROJECT, SOME CONDUITS AND WIRES ARE SHOWN ON THE DRAWINGS, BUT IT IS EXPECTED THAT SOME ADDITIONAL CONDUITS AND WIRES MAY BE REQUIRED BY EQUIPMENT MANUFACTURERS TO COMPLETE INSTALLATION. IT IS INCUMBENT UPON THE GENERAL CONTRACTOR TO COORDINATE THIS REQUIREMENT WITH HIS SUBCONTRACTORS TO MAKE SURE THAT EQUIPMENT SUPPLIER PROVIDED ALL NECESSARY ELECTRICAL INFORMATION TO ELECTRICAL SUBCONTRACTOR FOR INCLUSION WHETHER SHOWN OR NOT SHOWN ON THE DRAWINGS.
7. IF OTHER THAN FIRST NAMED EQUIPMENT IS USED, IT SHALL BE CAREFULLY CHECKED FOR ELECTRICAL REQUIREMENTS AND CONTROL REQUIREMENTS OF ALTERNATE EQUIPMENT. SHOULD CHANGES OR ADDITIONS OCCUR IN ELECTRICAL WORK, OR THE WORK OF OTHER CONTRACTORS BE REVISED BY THE ALTERNATE EQUIPMENT, THE COST OF ALL CHANGES SHALL BE BORNE BY THE ELECTRICAL CONTRACTOR.

REGISTERED PROFESSIONAL ENGINEER
No. 86-171214-2202
KEITH B. HEGERHORST
08/14/19
STATE OF UTAH

REVISIONS

NO.	DATE	REMARKS

UPDATED:
PLOTTED:
DWG NAME:
SCALE:

Jones & DeMille Engineering, Inc.
CIVIL ENGINEERING - SURVEYING - TESTING
GIS - ENVIRONMENTAL
1.800.748.5275 www.jonesanddemille.com

APPROVAL RECOMM: PROJECT DESIGN ENGINEER DATE
APPROVED QUALITY MANAGEMENT REVIEW DATE

SPRINGVILLE CITY
BARTHOLOMEW WATER TANK
ELECTRICAL LEGEND

PROJECT NUMBER: 1802-207

UTAH
COUNTY

SHEET NO. E-101

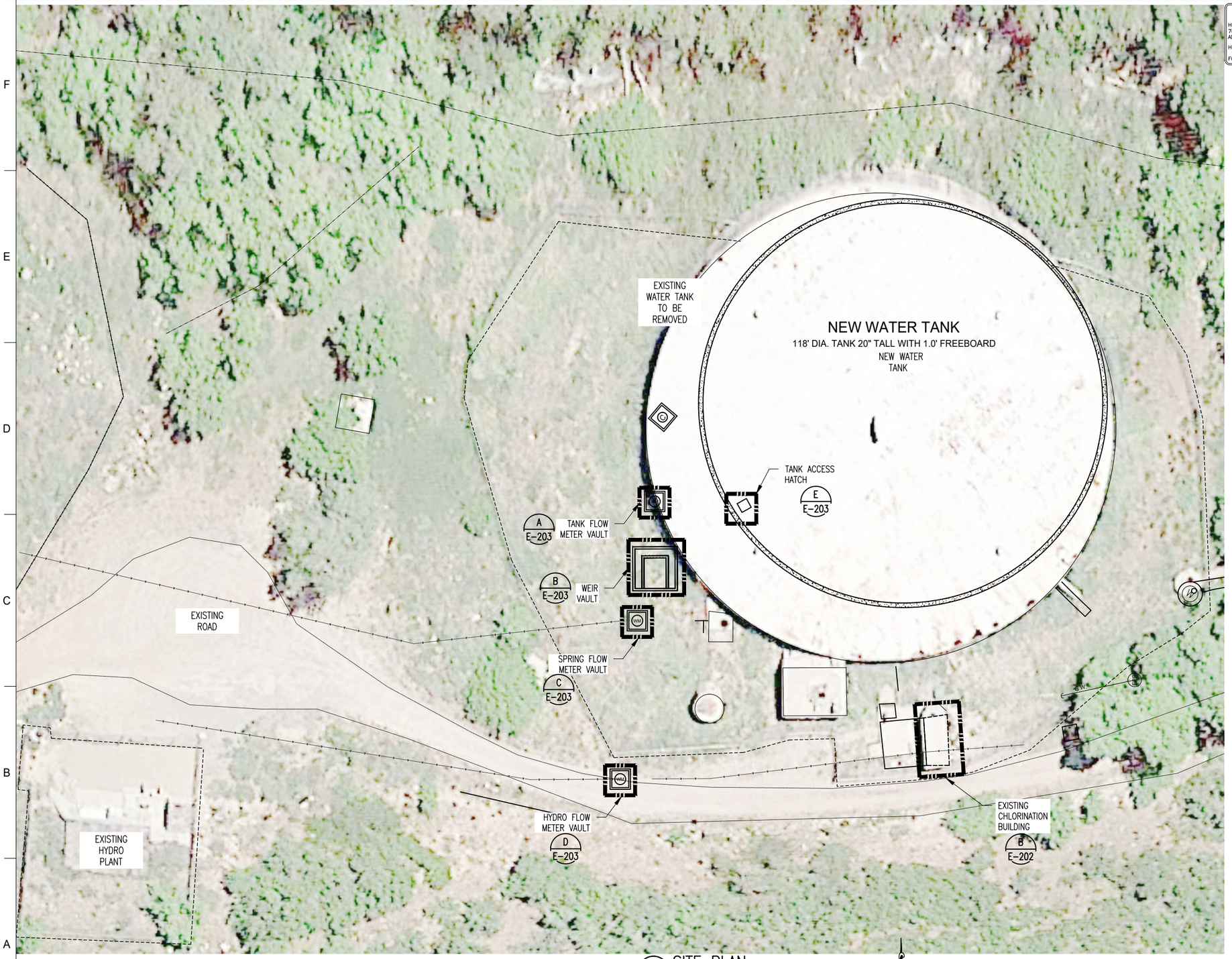

A SITE PLAN
SCALE: 0 15' 30' 60' 90'
1"=30'

H.P.E. INC. ELECTRICAL ENGINEERS
POWER SYSTEMS, CONTROL & INSTRUMENTATION SYSTEMS
HEGERHORST POWER ENGINEERING INCORPORATED (801) 642-2051
708 EAST 50 SOUTH FAX (801) 642-2154
AMERICAN FORK, UT 84003
HPE PROJECT 18023
©2018
FOR INFORMATION ABOUT THIS JOB, PLEASE CONTACT: KEITH HEGERHORST

GENERAL NOTES:

1. REFER TO ONE-LINE DIAGRAM FOR WIRE AND CONDUIT REQUIREMENTS.
2. VERIFY METERING VAULT AND TANK HATCH LOCATIONS WITH CIVIL DRAWINGS.
3. COORDINATE CONDUIT ROUTING FROM NEW DEVICES TO EXISTING CHLORINATION BUILDING WITH OWNER DURING CONSTRUCTION. IDENTIFY FINAL ROUTING ON AS-BUILD ELECTRICAL DRAWINGS.

SHEET KEYNOTES:

1. PROVIDE A 3/4"X10' GROUND ROD AT VAULT TO GROUND FLOW METER AS REQUIRED BY MANUFACTURER.

REGISTERED PROFESSIONAL ENGINEER
No. 86-171214-2202
KEITH B. HEGERHORST
08/14/19
STATE OF UTAH

NO.	DATE	REMARKS

REVISIONS

UPDATED:
PLOTTED:

SCALE:
DWG NAME:

Jones & DeMille Engineering, Inc.
CIVIL ENGINEERING - SURVEYING - TESTING
GIS - ENVIRONMENTAL
1.800.748.5275 www.jonesanddemille.com

APPROVAL RECOMM: DATE
PROJECT DESIGN ENGINEER
APPROVED DATE
QUALITY MANAGEMENT REVIEW

SPRINGVILLE CITY
BARTHOLOMEW WATER TANK
SITE PLAN

PROJECT NUMBER: 1802-207

UTAH
COUNTY

SHEET NO. E-201

BARTHOLOMEW RTU I/O LIST

ANALOG INPUTS

NEW DEVICE	EXISTING DEVICE	LOCATION	DESCRIPTION
-	EXISTING	CHLORINE ROOM	CHLORINE ROOM TEMPERATURE
NEW	-	ELECTRICAL ROOM	HYDRO FLOW (FIT-03)
NEW	-	ELECTRICAL ROOM	SPRING FLOW (FIT-02)
-	EXISTING	CHLORINE ROOM	TANK 100-1 WEIGHT (WIT-1A)
-	EXISTING	CHLORINE ROOM	TANK 100-2 WEIGHT (WIT-1B)
-	EXISTING	CHLORINE ROOM	TANK 100-3 WEIGHT (WIT -2A)
-	EXISTING	CHLORINE ROOM	TANK 100-4 WEIGHT (WIT-2B)
NEW	-	ELECTRICAL ROOM	TANK FLOW (FIT-01)
NEW	-	SITE	TANK LEVEL (LE-01)

ANALOG OUTPUTS

NEW DEVICE	EXISTING DEVICE		DESCRIPTION
-	EXISTING	CHLORINE ROOM	V-100 PACING FLOW (CHLORINE VAULT)
-	EXISTING	CHLORINE ROOM	V-101 PACING FLOW (METER VAULT)
			SPARE

DISCRETE INPUTS EXISTING

NEW DEVICE	EXISTING DEVICE		DESCRIPTION
-	EXISTING	ELECTRICAL ROOM	CHLORINE LEAK ALARM
-	EXISTING	CHLORINE ROOM	CHLORINE ROOM DOOR OPEN
-	EXISTING	CHLORINE ROOM	CHLORINE ROOM FLOOD
-	EXISTING	ELECTRICAL ROOM	ELECTRICAL ROOM DOOR OPEN
-	EXISTING	CHLORINE ROOM	EXHAUST FAN RUNNING
-	EXISTING	CHLORINE ROOM	SOLUTION PUMP HOA IN AUTO
-	EXISTING	CHLORINE ROOM	SOLUTION PUMP HOA IN HAND
-	EXISTING	CHLORINE ROOM	SOLUTION PUMP RUNNING
NEW	-	SITE	TANK HATCH OPEN
NEW	-	SITE	WEIR HATCH A OPEN
NEW	-	SITE	WEIR HATCH B OPEN

DISCRETE OUTPUTS

NEW DEVICE	EXISTING DEVICE		DESCRIPTION
-	EXISTING	CHLORINE ROOM	EXHAUST FAN RUN
-	EXISTING	CHLORINE ROOM	SV-100 OPEN (CHLORINE VAULT)
-	EXISTING	CHLORINE ROOM	SV-101 OPEN (METER VAULT)
-	EXISTING	CHLORINE ROOM	SOLUTION PUMP RUN
-	EXISTING	ELECTRICAL ROOM	CHLORINE RM ALARM LIGHT

A — RTU_INPUT_OUTPUT_LIST
SCALE: NTS

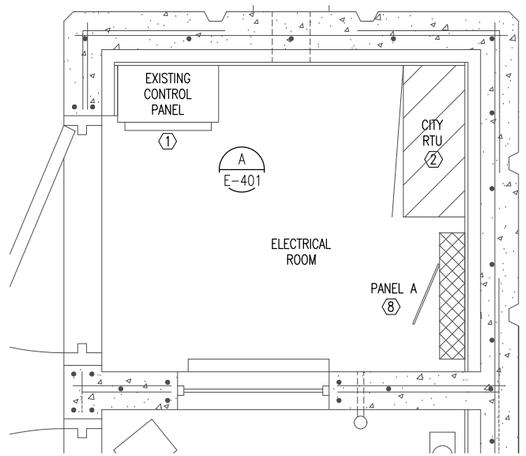

B — EXISTING ELECTRICAL ROOM ARRANGEMENT
SCALE: 0 2' 4' 6'
1/2"=1'-0"

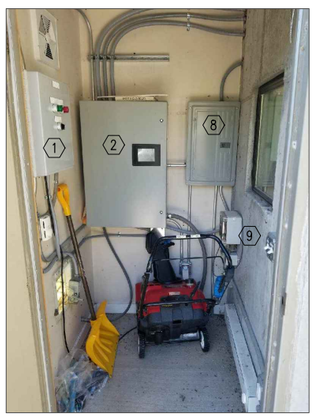

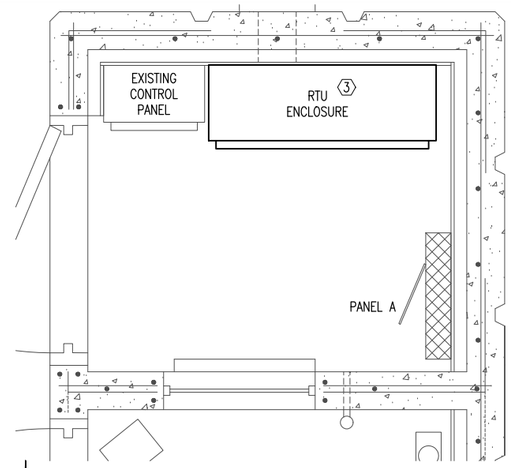

C — NEW ELECTRICAL ROOM ARRANGEMENT
SCALE: 1/2" = 1'-0"

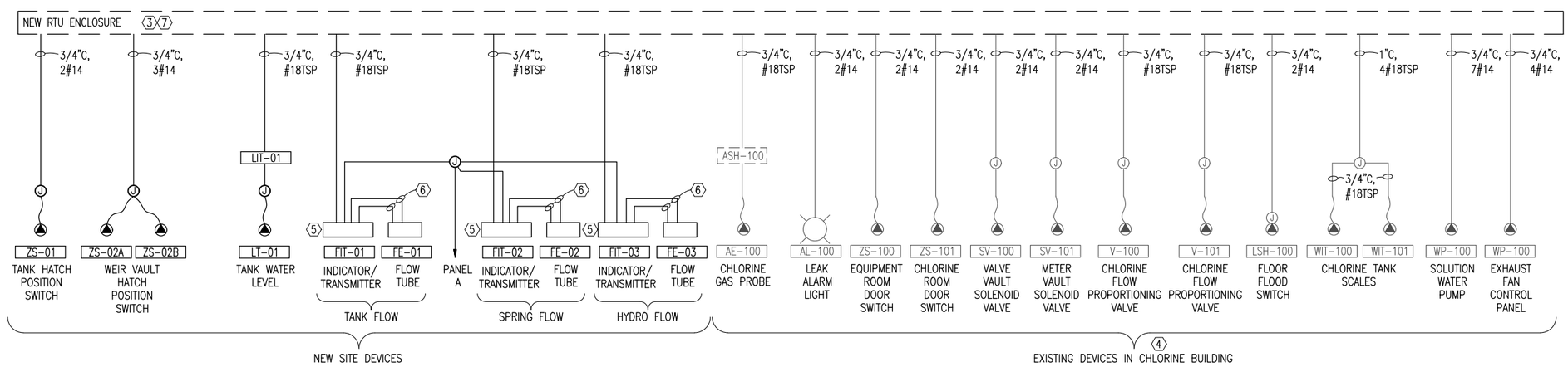

D — INSTRUMENTATION AND CONTROL ONE-LINE
SCALE: NTS

H.P.E., INC. ELECTRICAL ENGINEERS
POWER SYSTEMS, CONTROL & INSTRUMENTATION SYSTEMS
HEGERHORST POWER ENGINEERING INCORPORATED (801) 642-2051
708 EAST 50 SOUTH FAX (801) 642-2154
AMERICAN FORK, UT 84003
HPE PROJECT 18023
FOR INFORMATION ABOUT THIS JOB, PLEASE CONTACT: KEITH HEGERHORST

©2018

GENERAL NOTES:

1. REFER TO ONE-LINE DIAGRAMS FOR WIRE AND CONDUIT REQUIREMENTS.
2. REFER TO ELECTRICAL PLANS FOR EQUIPMENT LOCATIONS.

SHEET KEYNOTES:

1. EXISTING EXHAUST FAN CONTROL PANEL SHALL REMAIN. MAINTAIN CIRCUIT INTEGRITY.
2. REMOVE EXISTING SCADA RTU ENCLOSURE AND SALVAGE TO OWNER.
3. PROVIDE AND INSTALL A 42"H X 36"W X 12"D, NEMA 1 ENCLOSURE WITH INTERNAL PANEL. PROVIDE INTERNAL PANEL TO OWNER. OWNER WILL PROVIDE AND INSTALL RTU AND RTU SUPPORT COMPONENTS. RE-WIRE RTU 120 VAC CIRCUIT FROM PANEL A TO NEW RTU ENCLOSURE. RETAIN SAME 20A/1P CIRCUIT BREAKER.
4. INSTALL OR RE-INSTALL I/O FROM SITE DEVICES AND CHLORINE BUILDING TO RTU ENCLOSURE. LEAVE 5-FT OF CONDUCTOR IN RTU ENCLOSURE AND TAG WITH THE DEVICE FOR THE OWNER TO TERMINATE IN THE NEW RTU ENCLSOURE.
5. FIELD LOCATE INDICATOR/TRANSMITTER IN ELECTRICAL ROOM. RE-WIRE THE PREVIOUS 120VAC CIRCUIT FOR THE CONTROL PANEL TO SUPPLY POWER TO THE FLOW METER INDICATOR/TRANSMITTERS.
6. SIGNAL AND DATA CONDUCTOR SUPPLIED WITH FLOW ELEMENT. CONTRACTOR SHALL ORDER FLOW METER WITH SUFFICIENT CABLE TO BE INSTALLED FROM FLOW TUBE TO INDICATOR/TRANSMITTER WITH NO SPLICES. PROVIDE SIGNAL AND DATA CONDUITS AS REQUIRED BY THE METER MANUFACTURER.
7. OWNER WILL TERMINATE I/O WIRING IN THE NEW RTU ENCLOSURE. CONTRACTOR TO INSTALL AND TERMINATE 120 VAC POWER.
8. EXISTING PANEL A SHALL REMAIN. MAINTAIN CIRCUIT INTEGRITY.
9. CHLORINE LEAK DETECTOR. MAINTAIN CIRCUIT INTEGRITY.

REGISTERED PROFESSIONAL ENGINEER
No. 86-171214-2202
KEITH B. HEGERHORST
08/14/19
STATE OF UTAH

REVISIONS

NO.	DATE	REMARKS

SCALE: DWG NAME: UPDATED: PLOTTED:

Jones & DeMille Engineering, Inc.
CIVIL ENGINEERING - SURVEYING - TESTING
GIS - ENVIRONMENTAL
1.800.748.5275 www.jonesanddemille.com

APPROVAL RECOMM: PROJECT DESIGN ENGINEER DATE
APPROVED QUALITY MANAGEMENT REVIEW DATE

SPRINGVILLE CITY
BARTHOLOMEW WATER TANK
EXISTING CHLORINE BUILDING PLAN

PROJECT NUMBER: 1802-207

UTAH
COUNTY

SHEET NO. E-202

H.P.E. INC. ELECTRICAL ENGINEERS
POWER SYSTEMS, CONTROL & INSTRUMENTATION SYSTEMS
HEGERHORST POWER ENGINEERING INCORPORATED (801) 642-2051
708 EAST 50 SOUTH FAX (801) 642-2154
AMERICAN FORK, UT 84003
HPE PROJECT 18023
©2016
FOR INFORMATION ABOUT THIS JOB, PLEASE CONTACT: KEITH HEGERHORST

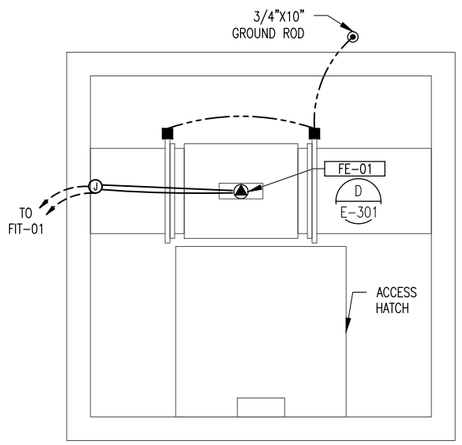

A TANK FLOW METER VAULT
SCALE: 0 2' 4' 8'
3/8"=1'-0"

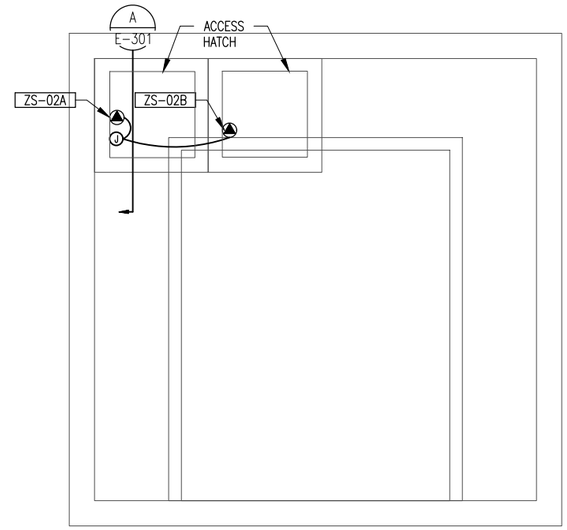

B WEIR VAULT
SCALE: 0 4' 8' 12'
1/4"=1'-0"

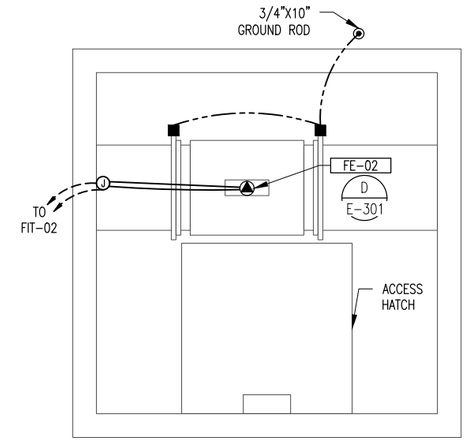

C SPRING FLOW METER VAULT
SCALE: 0 2' 4' 8'
3/8"=1'-0"

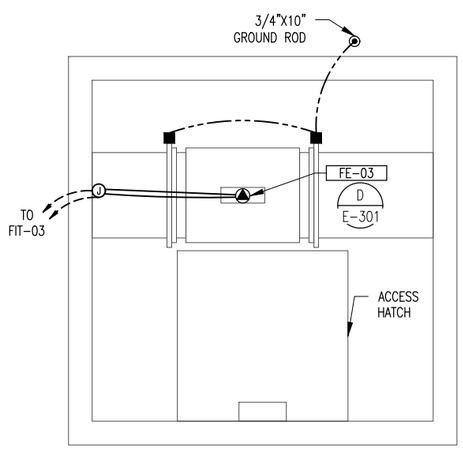

D HYDRO FLOW METER VAULT
SCALE: 0 2' 4' 8'
3/8"=1'-0"

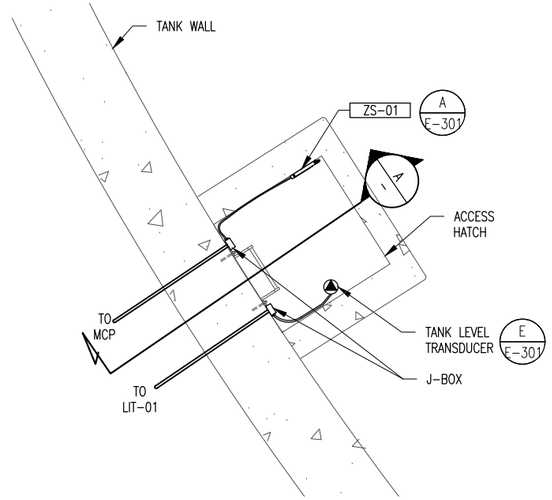

TYPICAL TANK HATCH SHOWN MODIFY AS REQUIRED.

E TANK ACCESS HATCH
SCALE: 0 2' 4' 8'
3/8"=1'-0"

REGISTERED PROFESSIONAL ENGINEER
No. 86-171214-2202
KEITH B. HEGERHORST
08/14/19
STATE OF UTAH

NO.	DATE	REMARKS

REVISIONS

SCALE: DWG NAME: UPDATED: PLOTTED:

Jones & DeMille Engineering, Inc.
CIVIL ENGINEERING - SURVEYING - TESTING
GIS - ENVIRONMENTAL
1.800.748.5275 www.jonesanddemille.com

APPROVAL RECOMM: PROJECT DESIGN ENGINEER DATE
APPROVED QUALITY MANAGEMENT REVIEW DATE

SPRINGVILLE CITY
BARTHOLOMEW WATER TANK
ENLARGED PLANS

PROJECT NUMBER: 1802-207

UTAH
COUNTY

SHEET NO. E-203

H.P.E. INC. ELECTRICAL ENGINEERS
POWER SYSTEMS, CONTROL & INSTRUMENTATION SYSTEMS
HEGERHORST POWER ENGINEERING INCORPORATED (801) 642-2051
708 EAST 50 SOUTH FAX (801) 642-2154
AMERICAN FORK, UT 84003
HPE PROJECT 18023
©2018
FOR INFORMATION ABOUT THIS JOB, PLEASE CONTACT: KEITH HEGERHORST

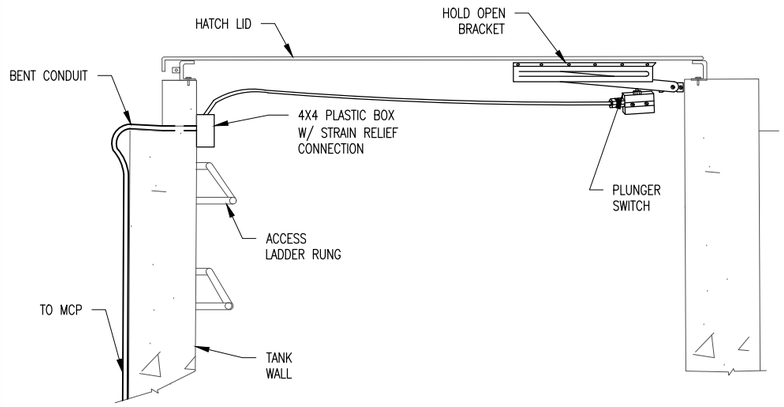

A TYPICAL HATCH SIDE VIEW
SCALE: 3/8" = 1'-0"

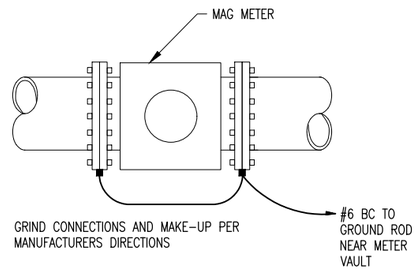

D MAG METER GROUNDING
SCALE: NTS

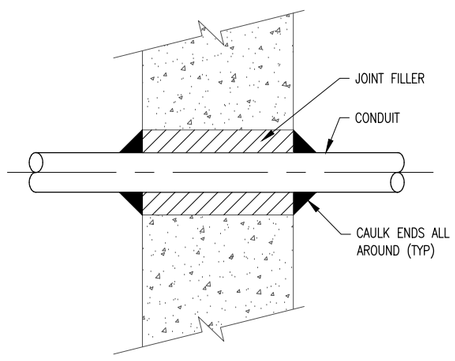

B CONDUIT THROUGH EXISTING CONCRETE
SCALE: 1 1/2" = 1'-0"

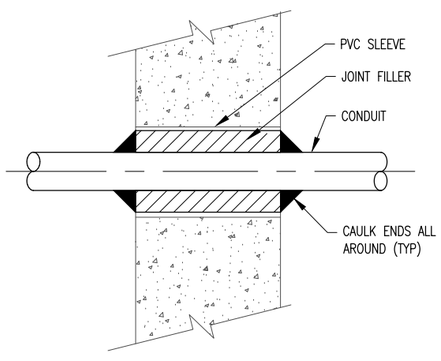

C CONDUIT THROUGH NEW CONCRETE
SCALE: 1 1/2" = 1'-0"

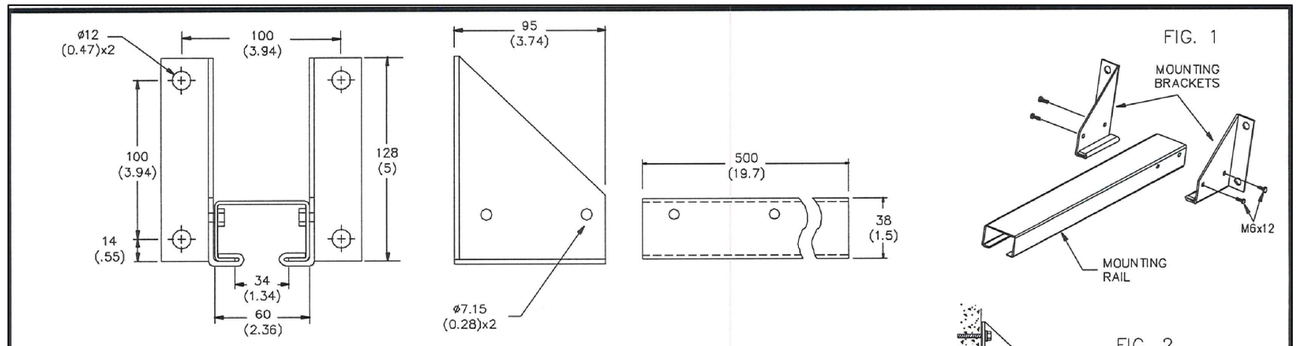

NOTES:

1) ALL DIMENSIONS ARE IN mm ( ) DENOTE DIMENSIONS IN INCHES.
2) USE TEMPLATE PROVIDED IN INSTRUCTION MANUAL TO LAYOUT HOLES FOR MOUNTING FMS 210.
3) SLIDE THE MOUNTING RAIL INTO THE SLOTS ON THE MOUNTING BRACKETS AND SECURE WITH THE FOUR M6 BOLTS. REFER TO FIG 1.
4) MOUNT THE FACE OF THE FMS 210 BRACKET TO A SOLID VERTICAL SURFACE ENSURING IT WILL SUPPORT THE ADDED WEIGHT OF THE SENSOR, (MAX 1.4 kg 3 LBS.) AFTER MOUNTING IS COMPLETE. (MOUNTING HARDWARE BY CUSTOMER)
5) WHEN MOUNTING AN XCT, XPS 10, 15, 10F, 15F, XRS OR ST-H TRANSDUCER USE THE TWO MOUNTING NUTS P/N 22850089, ONE ON TOP AND ONE UNDERNEATH TO SECURE THE SENSOR TO THE FMS 210. REFER TO FIG 2. ENSURE THAT WHEN THE SENSOR IS MOUNTED IT WILL BE THE REQUIRED DISTANCE AWAY FROM ANY WALL OR OBSTRUCTION. REFER TO TRANSDUCER INSTRUCTION MANUAL.
6) FOR FURTHER DETAILS REFER TO THE INSTRUCTION MANUAL OR CONTACT YOUR MILLTRONICS REPRESENTATIVE.
7) RAIL, RAIL MOUNTING & SCREWS ARE 304 STAINLESS STEEL.

USE DIMENSIONS ONLY – DO NOT SCALE

No.	REVISION DESCRIPTION	DWG BY	APPRO.	DATE
1	ADDED NOTE ABOUT MATERIAL BEING 304 STAINLESS STEEL PER ECN # 0-000-0-0097	RPC	IW	DEC 07/00
0	FOR CONSTRUCTION	RPC	JCM	JAN 11/00

CONFIDENTIAL
IMPORTANT NOTICE
THIS DOCUMENT REMAINS THE PROPERTY OF MILLTRONICS AND IS SUBJECT TO RECALL. IT MAY NOT BE COPIED, AND IS ISSUED AND CAN BE UTILIZED ONLY FOR SUCH LIMITED PURPOSES AS MAY SPECIFICALLY HAVE BEEN AUTHORIZED BY MILLTRONICS. IT IS TO BE MAINTAINED CONFIDENTIAL, SINCE IT MAY CONTAIN PROPRIETARY INFORMATION AND TRADE SECRETS OF MILLTRONICS OR OTHERS. THE ITEMS DEPICTED MAY THEMSELVES BE THE SUBJECT OF PATENTS, INDUSTRIAL DESIGN REGISTRATIONS OR COPYRIGHTS OF MILLTRONICS OR OTHERS, AND THE ISSUE OF THIS DRAWING DOES NOT IMPLY ANY LICENSE UNDER ANY SUCH RIGHTS.
COPYRIGHT MILLTRONICS
ALL RIGHTS RESERVED

DRAWING SCALE: NONE
DRAWN BY: R. CLYSDALE
CHECKED BY: I. WATSON
APPROVED BY: J. MANN

TOLERANCES UNLESS OTHERWISE NOTED
1 PLACE DECIMAL ±0.3 — FRACTIONS
2 PLACE DECIMAL ±0.10
3 PLACE DECIMAL N/A — ANGLES ±0.5°

THIRD ANGLE PROJECTION

TITLE: FMS 210 CUSTOMER INSTALLATION DRAWING

MILLTRONICS
PETERBOROUGH, ONTARIO, CANADA.

FILE No. 2365010401	SIZE	DRAWING No.	REV.
PLOT AT 1=1	B	23650104	1
JOB No.		SHEET 1 OF 1	

E TANK LEVEL TRANSDUCER INSTALLATION DETAIL
SCALE: N/A

REGISTERED PROFESSIONAL ENGINEER No. 86-171214-2202 KEITH B. HEGERHORST 08/14/19 STATE OF UTAH

Jones & DeMille Engineering, Inc.
CIVIL ENGINEERING - SURVEYING - TESTING
GIS - ENVIRONMENTAL
1.800.748.5275 www.jonesanddemille.com

NO.	DATE	REMARKS

REVISIONS
UPDATED:
PLOTTED:
DWG NAME:
SCALE:
APPROVAL RECOMM: DATE
PROJECT DESIGN ENGINEER
APPROVED DATE
QUALITY MANAGEMENT REVIEW

SPRINGVILLE CITY
BARTHOLOMEW WATER TANK
ELECTRICAL DETAILS
PROJECT NUMBER: 1802-207
UTAH
COUNTY
SHEET NO. E-301