SPRINGVILLE CITY

400 SOUTH WELL - No. 2 WELL HOUSE

JANUARY 2019

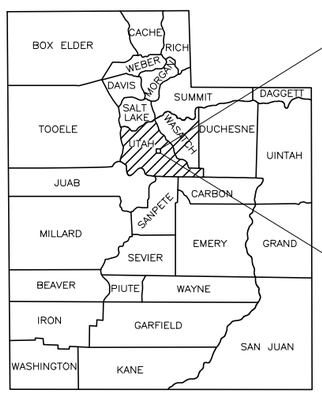

STATE OF UTAH

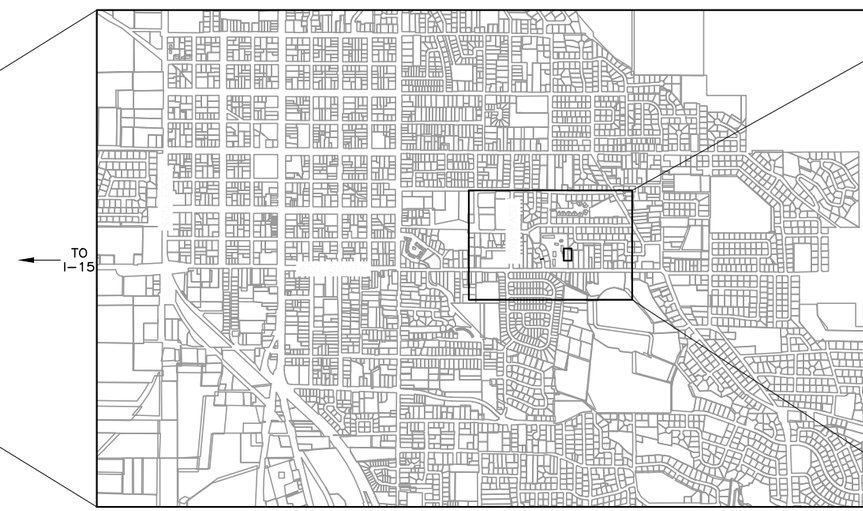

VICINITY MAP

500 0 500 1000 FEET

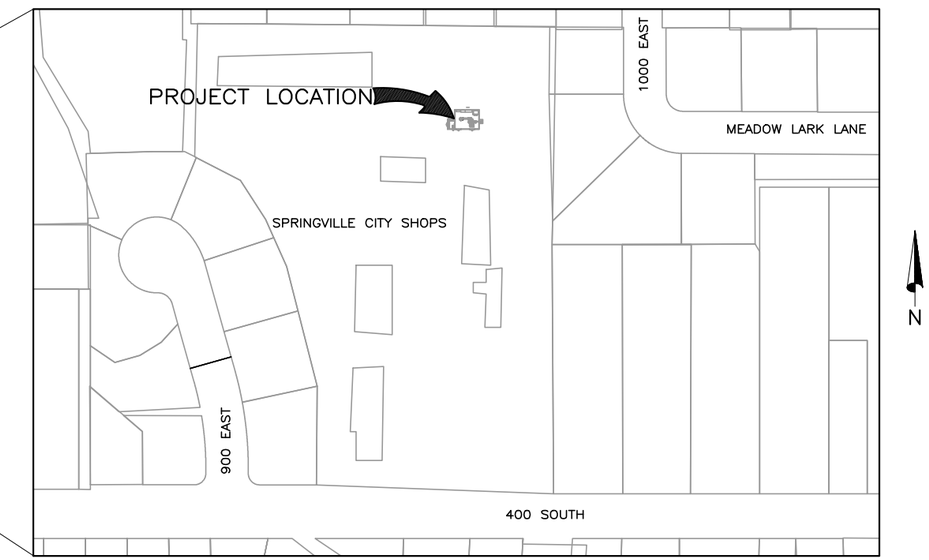

PROJECT LOCATION

4TH SOUTH WELL – 975 EAST 400 SOUTH

100 0 100 200 FEET

PROFESSIONAL ENGINEER
No. 186689-2202
VERN G. CONDER
1-30-19
STATE OF UTAH

HANSEN, ALLEN & LUCE DESIGN TEAM

MARVIN E. ALLEN, P.E. – PROJECT MANAGER
VERN G. CONDER, P.E. – PROJECT ENGINEER

ROBERT C. CONDER, P.E. – STRUCTURAL
(CONDER ENGINEERING)

KEITH B. HEGERHORST, P.E. – ELECTRICAL
(HPE, INC. ELECTRICAL ENGINEERS)

E. TAYLOR GROBERG – HVAC
(GUNTHERS COMFORT AIR)

HANSEN ALLEN & LUCE inc
ENGINEERS

FILE NAME: PROJECTS\260 – SPRINGVILLE CITY\44.200 400 S WELL NO. 2 PUMP HOUSE\CAD\WORKING\G-1 COVER.DWG
FILE DATE: 1.30.2019 16:03:42 (CAH)

2/02

SECTION & DETAIL IDENTIFICATION

SECTION IDENTIFICATION

SECTION CUT ON DRAWING NO. 1:

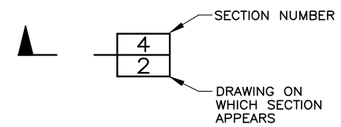

ON DRAWING NO. 2, THIS SECTION IS IDENTIFIED AS:

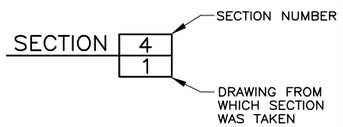

DETAIL IDENTIFICATION

DETAIL CALL-OUT ON DRAWING NO. 1:

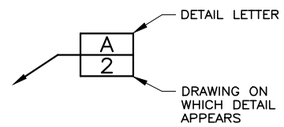

ON DRAWING NO. 2, THIS DETAIL IS IDENTIFIED AS:

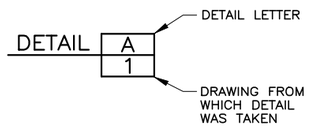

NOTES:

1. IF SECTION CUT AND SECTION OR DETAIL CALL-OUT AND DETAIL ARE SHOWN ON SAME DRAWING, DRAWING NUMBER IS REPLACED BY A LINE.
2. DETAIL LETTERS "I" AND "O" NOT USED.

LEGEND

4-G	EXISTING GAS LINE W/ SIZE
GS GS GS	EXISTING GAS SERVICE
10-W	EXISTING WATER LINE W/ SIZE
WS WS WS	EXISTING WATER SERVICE
15-SS	EXISTING SANITARY SEWER W/ SIZE
SL SL SL	EXISTING SANITARY SEWER LATERAL
24-SD	EXISTING STORM DRAIN W/ SIZE
FO-UG	EXISTING FIBER OPTIC LINE
T-UG	EXISTING UNDERGROUND TELEPHONE
P-UG	EXISTING UNDERGROUND POWER LINE
P-OH	EXISTING OVERHEAD POWER LINE
X	EXISTING FENCE LINE

EXISTING FIRE HYDRANT	EXISTING SANITARY SEWER MANHOLE
EXISTING POWER POLE	EXISTING STORM DRAIN MANHOLE
EXISTING LIGHT POLE	EXISTING WATER MANHOLE
EXISTING ELECTRICAL BOX	EXISTING GUY WIRE
EXISTING WATER METER	EXISTING VALVES

ABBREVIATIONS

@	=	AT	MIN.	=	MINIMUM
CC	=	CENTER TO CENTER	MJ	=	MECHANICAL JOINT
CIP	=	CAST IRON PIPE	N.T.S.	=	NOT TO SCALE
℄	=	CENTER LINE	O.C.	=	ON CENTER
CLR.	=	CLEARANCE	OHP	=	OVERHEAD POWER LINE
CMP	=	CORRUGATED METAL PIPE	POLY	=	POLYETHYLENE
ø	=	DIAMETER	PE	=	PLAIN END
DIA.	=	DIAMETER	PL	=	PROPERTY LINE
DIP	=	DUCTILE IRON PIPE	PRV	=	PRESSURE REDUCING VALVE
DWG	=	DRAWING	PSF	=	POUNDS PER SQUARE FOOT
EF	=	EACH FACE	PSI	=	POUNDS PER SQUARE INCH
EL.	=	ELEVATION	PVC	=	POLYVINYL CHLORIDE
E.O.	=	EDGE OF OIL	R.O.W.	=	RIGHT OF WAY
E.W.	=	EACH WAY	SCR	=	SCREWED
ES	=	EACH SIDE	SF	=	SQUARE FEET
FF	=	FINISH FLOOR	HP	=	HIGH PRESSURE
FL	=	FLOW LINE	SQ.	=	SQUARE
FLG	=	FLANGE	SS	=	STAINLESS STEEL
FPS	=	FEET PER SECOND	STA.	=	STATION
FTG	=	FOOTING	TBC	=	TOP BACK OF CURB
GIP	=	GALVANIZED IRON PIPE	THD.	=	THREAD
GPM	=	GALLONS PER MINUTE	TYP.	=	TYPICAL
G.V.	=	GATE VALVE	UBC	=	UNTREATED BASE COURSE
ID	=	INSIDE DIAMETER	UGP	=	UNDERGROUND POWER LINE
MAX.	=	MAXIMUM	VTR	=	VENT THRU ROOF
MG	=	MILLION GALLON(S)	YD.	=	YARD

GENERAL NOTES

1. THESE DRAWINGS MAY REFERENCE THE APWA STANDARD 2017 SPECIFICATIONS AND PLANS AS PUBLISHED BY UTAH T2 CENTER (435) 797-2931.
2. THE CONTRACTOR SHALL MEET ALL UTAH STATE DEPARTMENT OF ENVIRONMENTAL QUALITY AND U.S. EPA REQUIREMENTS WITH RESPECT TO THEIR MINIMUM RULES AND REGULATIONS. ALL MATERIALS THAT MAY CONTACT DRINKING WATER, INCLUDING, PIPES, GASKETS, LUBRICANTS, O-RINGS, SHALL BE ANSI/NSF 61, DRINKING WATER SYSTEM COMPONENTS – HEALTH EFFECTS AND BE APPROPRIATELY STAMPED WITH THE NSF LOGO.
3. CONSTRUCTION OPERATIONS SHALL BE CONDUCTED AND SIGNS, BARRICADES, AND FLASHERS SHALL BE PLACED SO AS TO COMPLY WITH OSHA, UTAH STATE INDUSTRIAL COMMISSION, LOCAL SAFETY STANDARDS, AND MANUAL ON UNIFORM TRAFFIC CONTROL.
4. THE CONTRACTOR SHALL BE RESPONSIBLE FOR LOCATING ALL UNDERGROUND UTILITIES, INCLUDING WATER LINES, IRRIGATION DRAIN LINES, TELEPHONE CABLES, AND ANY OTHER OBSTRUCTION DURING THE COURSE OF CONSTRUCTION AND INSTALLATION OF THE PIPELINES. SAID UTILITIES SHALL BE RESTORED TO A CONDITION AT LEAST EQUAL TO THEIR ORIGINAL CONDITION.
5. THE CONTRACTOR SHALL BE RESPONSIBLE TO OBTAIN RIGHT OF INGRESS AND EGRESS SHOULD HE VENTURE ONTO PRIVATE PROPERTY WHICH IS NOT INCLUDED IN CITY ACQUIRED RIGHTS-OF-WAY AND EASEMENTS.
6. UNLESS DETAILED, SPECIFIED OR INDICATED OTHERWISE, CONSTRUCTION SHALL BE AS INDICATED IN THE APPLICABLE TYPICAL DETAILS AND GENERAL NOTES. TYPICAL DETAILS ARE MEANT TO APPLY EVEN THOUGH NOT REFERENCED AT SPECIFIC LOCATIONS OR IN SPECIFIC DRAWINGS.
7. THE CONTRACTOR SHALL BE RESPONSIBLE TO PROTECT ALL EXISTING IMPROVEMENTS DURING CONSTRUCTION AND SHALL REPLACE OR RESTORE ANY IMPROVEMENTS DAMAGED AS A RESULT OF THE CONSTRUCTION ACTIVITY, AS DIRECTED BY THE ENGINEER.
8. THE CONTRACTOR SHALL VERIFY ALL DIMENSIONS BEFORE STARTING WORK AND SHALL IMMEDIATELY NOTIFY THE ENGINEER OF ANY DISCREPANCIES.

DRAWING INDEX

	SHEET NO.	TITLE
GENERAL	G-1	COVER SHEET
	G-2	DRAWING INDEX
	G-3	GENERAL NOTES
ARCHITECTURAL	A-1	BUILDING ELEVATIONS
	A-2	BUILDING ARCHITECTURAL SCHEDULES
CIVIL	C-1	SITE GRADING PLAN
	C-2	FLOOR PLAN
	C-3	BUILDING SECTION AND DETAILS
	C-4	BUILDING SECTION AND DETAILS
	C-4A	ROOF FRAMING
	C-5	BUILDING DETAILS
	C-6	FITTING SCHEDULE AND CHLORINATION DETAILS
	C-7	PUMP BASE DETAILS
	C-8	MISCELLANEOUS DETAILS
PLAN & PROFILE	SD-1	PUMP-TO-WASTE STA 0+00 TO STA 5+00
	SD-2	PUMP-TO-WASTE STA 5+00 TO STA 6+91
HVAC	H-1	HVAC DESIGN
	H-2	HVAC SPECIFICATIONS
	H-3	HVAC SPECIFICATIONS
	H-4	HVAC SPECIFICATIONS
ELECTRICAL	E1.0	LEGEND
	E1.1	ABBREVIATIONS AND TABLES
	E2.0	ONE-LINE DIAGRAMS
	E2.2	VFD WIRING DIAGRAM
	E2.3	CP-1 TYPICAL WIRING DIAGRAM, SHEET 1
	E2.4	CP-1 TYPICAL WIRING DIAGRAM, SHEET 2
	E3.0	ELECTRICAL SCHEDULES, SHEET 1
	E4.0	ELECTRICAL SITE PLAN
	E5.0	BUILDING POWER & GROUNDING PLAN
	E5.1	BUILDING INSTR. & CONTROL PLAN
	E5.2	BUILDING LIGHTING PLAN
	E6.0	CONTROL PANEL ELEVATIONS
	E7.0	ELECTRICAL DETAILS, SHEET 1
	E7.1	ELECTRICAL DETAILS, SHEET 2
	E7.2	ELECTRICAL DETAILS, SHEET 3

STRUCTURAL NOTES

GENERAL NOTES:

1. THE GENERAL CONTRACTOR AND SUB-CONTRACTORS SHALL PROVIDE SUFFICIENT SKILLED WORKMEN AND SUPERVISORS WHO SHALL BE PRESENT AT ALL TIMES DURING EXECUTION OF THE WORK. A PROJECT MANAGER, SHALL BE ASSIGNED BY THE GENERAL CONTRACTOR, AND SHALL BE RESPONSIBLE FOR THE DAILY COORDINATION OF THE PROJECT AND SHALL MAINTAIN ALL REQUIRED DRAWINGS, SPECIFICATIONS, REPORTS, AND OTHER ITEMS FOR REVIEW AT THE SITE.
2. ALL CONSTRUCTION SHALL BE ACCORDING TO THE 2015 EDITION OF THE INTERNATIONAL BUILDING CODE (IBC). AS AMENDED BY THE STATE OF UTAH.
3. THE CONTRACTOR SHALL BE RESPONSIBLE FOR THE PROTECTION OF AND SAFETY IN AND AROUND THE JOB SITE AND/OR ADJACENT PROPERTIES.
4. THE CONTRACTOR AND/OR OWNER SHALL KEEP LOADS ON THE STRUCTURE WITHIN THE LIMITS OF THE DESIGN LOADS BOTH DURING AND AFTER CONSTRUCTION
5. ALL NEW CONSTRUCTION SHALL CONFORM TO SPRINGVILLE CITY STANDARD SPECIFICATIONS AND DRAWINGS. ANY CONFLICT BETWEEN THESE PROJECT SPECIFICATIONS AND SPRINGVILLE CITY STANDARD SPECIFICATIONS AND DRAWINGS SHALL BE RESOLVED IN FAVOR OF THE MORE STRINGENT CRITERIA AS DETERMINED BY THE ENGINEER.

DESIGN CRITERIA

1. SEISMIC DESIGN CATEGORY: "D"
2. WIND SPEED: 115 MPH; EXPOSURE "B"
3. ROOF LIVE LOAD: 40 PSF UNIFORM LOAD.
4. MAX SOIL BEARING PRESSURE: 1500 PSF.

STRUCTURAL NOTES:

REINFORCED CONCRETE:

1. ALL CONCRETE CONSTRUCTION, INCLUDING BENDING OF BARS, SHALL COMPLY WITH ACI "BUILDING CODE REQUIREMENTS FOR REINFORCED CONCRETE" (ACI 318).
2. UNLESS CALLED OUT OTHERWISE ON THE PLANS, MINIMUM REINFORCEMENT OF CONCRETE WORK SHALL BE:
   WALLS:
   8" THICK OR LESS – USE #5 @ 16" E.W.
   9" OR THICKER – USE #5 @ 12" E.W., E.F.
   SLABS:
   8" THICK OR LESS – USE #4 @ 12" E.W.
3. ALL WALL REINFORCEMENT AT CORNERS OR JUNCTIONS OF WALLS SHALL BE CONTINUOUS, LAPPED, OR TERMINATED IN A STANDARD 180 DEGREE HOOK. LAP SPLICES SHALL CONFORM WITH NOTE 6.
4. UNLESS SHOWN OTHERWISE ALL BARS SHALL BE DOWELED. DOWELS SHALL BE THE SAME SIZE AND SPACING AS THE REINFORCEMENT WHICH IS TO BE SPLICED TO THE DOWELS.
5. ALL REINFORCING BARS SHALL BE GRADE 60 AND SHALL CONFORM TO ASTM A-615, CURRENT REVISION. REINFORCING STEEL SHALL BE NEW AND FREE FROM RUST, OIL OR OTHER BOND INHIBITOR.
6. ALL CONTINUOUS REINFORCING BARS SHALL LAP AT LEAST 40 BAR DIAMETERS. SPLICES SHALL BE MADE AWAY FROM POINTS OF MAXIMUM STRESS. MINIMUM LAP SHALL BE 18 IN.
7. CONCRETE COVER OVER REINFORCEMENT SHALL BE AS FOLLOWS:
   A. SURFACE NOT EXPOSED DIRECTLY TO THE GROUND, WATER OR WEATHER AFTER FORM REMOVAL:
      CONCRETE SLABS IN BUILDINGS - - - - - - - 3/4"
      CONCRETE SLABS IN WATER BEARING
   B. SURFACES EXPOSED DIRECTLY TO THE GROUND, WATER OR WEATHER AFTER FORM REMOVAL:
      FOR #5 BARS OR SMALLER - - - - - - - - 1-1/2"
      FOR #6 BARS OR LARGER - - - - - - - - -2"
   C. CONCRETE PLACED DIRECTLY AGAINST GROUND – -3"
   D. REINFORCEMENT SHALL BE PLACED WITHIN A TOLERANCE OF ±1/4" OF POSITION SPECIFIED.
8. CONCRETE CURING SHALL BE IN ACCORDANCE WITH THE CONTRACT DOCUMENTS. SOME CONCRETE WORK REQUIRES WATER CURING, AS MEMBRANE CURING IS NOT ALLOWED. THE CONTRACTOR IS WARNED THAT WATER CURING IS DIFFICULT AT TIMES DUE TO WIND AND DRY CONDITIONS. THE CONTRACTOR SHALL STUDY REQUIREMENTS AND SHALL FURNISH ADEQUATE SYSTEMS TO PROVIDE WATER CURING WHERE REQUIRED. TOP OF WALLS SHALL BE KEPT VISIBLY MOIST AT ALL TIMES AND SHALL BE FLOODED NOT LESS THAN THREE TIMES DAILY.
   A. FOR POURING CONCRETE DURING COLD WEATHER:
      1. FOLLOW RECOMMENDATIONS CONTAINED IN PUBLICATION ACI 306R "COLD-WEATHER CONCRETING," CURRENT REVISION.
      2. PROTECT CONCRETE WORK FROM PHYSICAL DAMAGE OR REDUCED STRENGTH WHICH COULD BE CAUSED BY FROST, FREEZING ACTIONS OR LOW TEMPERATURES.
      3. WHEN AIR TEMPERATURE HAS FALLEN TO OR IS EXPECTED TO FALL BELOW 40°F OR 4°C, UNIFORMLY HEAT WATER AND AGGREGATES BEFORE MIXING TO OBTAIN A CONCRETE MIXTURE TEMPERATURE OF NOT LESS THAN 50°F OR 10°C, AND NOT MORE THAN 80°F OR 27°C AT TIME OF PLACEMENT.
      4. CONCRETE SHALL BE AIR ENTRAINED WITH AIR CONTENT OF 6% +/- 1% BY VOLUME.
      5. DO NOT USE FROZEN MATERIALS OR MATERIALS CONTAINING ICE OR SNOW. DO NOT PLACE CONCRETE ON FROZEN SUBGRADE OR ON SUBGRADE CONTAINING FROZEN MATERIALS.
      6. DO NOT USE CALCIUM CHLORIDE, SALT OR OTHER MATERIALS CONTAINING ANTIFREEZE AGENTS OR CHEMICAL ACCELERATORS, UNLESS OTHERWISE APPROVED IN THE MIX DESIGN.
      7. COVER AND HEAT CONCRETE FOR A MINIMUM OF 7 DAYS AS RECOMMENDED BY ACI 306R, CURRENT REVISION.

REINFORCED CONCRETE CONT.

   B. FOR POURING CONCRETE DURING HOT WEATHER:
      FOLLOW RECOMMENDATIONS CONTAINED IN PUBLICATION ACI 305R "COLD-WEATHER CONCRETING," CURRENT REVISION.
      PROTECT CONCRETE FROM FLASH CURING BY PROVIDING A WATER/MOISTURE CURE FOR 3 DAYS.
      A 4500 PSI (WITH A 6-1/2 BAG MIX) IS RECOMMENDED FOR THESE CONDITIONS.
9. NO BACKFILL SHALL BE PLACED AGAINST WALLS UNTIL CONCRETE HAS REACHED 85 PERCENT OF THE SPECIFIED STRENGTH AND THE CONNECTING SLABS AND BEAMS HAVE BEEN CAST AND HAVE REACHED 85 PERCENT OF THE SPECIFIED STRENGTH.
10. CONCRETE TO HAVE A MIN. 28 DAY STRENGTH OF 4000 PSI FOR SLABS & 3500 PSI FOR FOOTINGS & FOUNDATION.

MASONRY WALL REINFORCING NOTES:

1. WALL REINFORCEMENT SHALL BE PLACED AND GROUTED AS DESCRIBED IN THE SPECIFICATIONS AND SHALL CONFORM TO IBC REQUIREMENTS.
2. ALL WALLS SHALL BE REINFORCED WITH A MINIMUM OF #5 VERTICAL REINFORCING GROUTED AT 32" O.C. AND (1) #5 @ 48" O.C. HORIZONTAL BOND BEAM. SEE WALL ELEVATION OR NOTE 5 FOR ADDITIONAL VERTICAL REINFORCEMENT ADJACENT TO WALL OPENINGS.
3. ALL VERTICAL REINFORCING SHALL EXTEND TO ROOF LEVEL AND SHALL BE DOWELED TO THE FOOTING WITH MATCHING DOWELS.
4. ALL DOWELS SHALL LAP WALL REINFORCING 48 DIA. AND EXTEND INTO FOUNDATION A MINIMUM OF 40 DIA. OR EXTEND 12 DIA. PLUS HAVE A STANDARD HOOK.
5. A #5 VERTICAL BAR SHALL BE PLACED AND GROUTED AT ALL WALL CORNERS AND WALL INTERSECTIONS AND TWO #5 VERTICAL BARS SHALL BE PLACED AT JAMBS OF WALL OPENINGS AND SUCH BARS SHALL EXTEND THE FULL HEIGHT OF WALL AND BE ANCHORED IN THE ROOF BOND BEAM AND FOOTING AS SPECIFIED IN PARAGRAPH ABOVE.
6. LINTELS FOR ALL OPENINGS SHALL BE AS SHOWN ON SHEET C-5. "TYPICAL CMU DETAILS", UNLESS OTHERWISE NOTED.
7. ALL HORIZONTAL AND VERTICAL JOINTS ON MASONRY UNITS SHALL BE CONCAVE ON BOTH FACES UNLESS SHOWN OR SPECIFIED OTHERWISE.
8. MASONRY CONTROL JOINTS IN WALLS SHALL BE INSTALLED AT 24'-0"± SPACING UNLESS SHOWN OTHERWISE.
9. EXTERIOR WALL CELLS NOT FILLED WITH GROUT SHALL BE FILLED WITH INSULATION.
10. ALL REINFORCING BARS SHALL BE GRADE 60, AND SHALL CONFORM WITH: "SPECIFICATIONS FOR DEFORMED BILLET-STEEL BARS FOR CONCRETE REINFORCEMENT", ASTM A-615. REINFORCING BARS SHALL BE NEW, FREE FROM RUST, OIL OR OTHER BOND INHIBITOR. WELDABLE REBAR TO BE ASTM A-706.
11. COLD WEATHER PLACEMENT OF MASONRY: IF THE LOW TEMPERATURE FOR ANY 24-HOUR PERIOD FOR THE FIRST SEVEN DAYS AFTER THE MASONRY IS PLACED OR GROUTED DROPS BELOW 40°F BUT REMAINS ABOVE 28°F, COVER MASONRY WITH INSULATED BLANKETS. IF THE TEMPERATURE DROPS BELOW 28°F FOR ANY PERIOD AS DESCRIBED ABOVE, APPLY HEAT AND INSULATED BLANKETS AND MAINTAIN A TEMPERATURE AT OR ABOVE 34°F FOR SEVEN DAYS.
12. PROVIDE (2) #5 @ TOP OF WALLS (TYP.)
13. ALL MASONRY TO HAVE SPECIAL INSPECTION PER TABLE 1704.5.1 OF IBC.
14. ALL VERTICAL AND HORIZONTAL BARS @ TERMINATING ENDS TO HAVE 180° BEND.

WOOD FRAMING NOTES

1. FRAMING LUMBER: DOUGLAS FIR LARCH (SURFACED DRY NOT TO EXCEED 19% MAXIMUM MOISTURE CONTENT), CONFORMING TO NATIONAL DESIGN SPECIFICATIONS (NDS) SUPPLEMENTS FOR WOOD DESIGN VALUES AND APPLICABLE STANDARDS IN THE FOLLOWING GRADES:
   A. SILLS: REDWOOD, OR PRESSURE TREATED, FOUNDATION GRADE.
   B. PLATES @ TOP OF MASONRY WALLS: DOUGLAS FIR-LARCH, NO. 1, FB=1000 PSI MIN.
   C. STUDS: DOUGLAS FIR-LARCH, OR HEMLOCK-FIR, STUD GRADE.
   D. BEAMS, JOISTS, LEDGERS, POSTS & HEADERS: DOUGLAS FIR-LARCH, NO. 2 MIN., 900 PSI MIN.
   E. ALL OTHER HORIZONTAL FRAMING MEMBERS: DOUGLAS FIR-LARCH, CONSTRUCTION GRADE.
   F. ALL OTHER VERTICAL FRAMING MEMBERS: DOUGLAS FIR-LARCH, STANDARD OR BETTER GRADE.
   G. SHEATHING: STANDARD EXTERIOR GRADE WITH EXTERIOR GLUE. APA RATED.
   H. GLUE-LAM BEAMS: DOUGLAS FIR-LARCH, 2400 PSI WITH AITC STAMP FOR QUALITY
2. PROVIDE SOLID BLOCKING AT LEAST 1-1/2" THICK AT ENDS AND AT EACH SUPPORT OF JOIST. PROVIDE APPROVED BRIDGING AT A MAXIMUM 8'-0" O.C. BETWEEN SUPPORTS.
3. NAILING SHALL CONFORM TO STANDARD NAILING SCHEDULE 2304.9.1 OF INTERNATIONAL BUILDING CODE UNLESS NOTED OTHERWISE ON PLANS OR SCHEDULES. ALL NAILS SHALL BE COMMON NAILS.
4. USE SIMPSON STRONG TIE (SST) HANGERS FOR ALL FLUSH CONNECTIONS. USE STRONGEST HANGER COMPATIBLE WITH MEMBER SIZE AND NAIL PER MANUFACTURER'S SPECIFICATION TO OBTAIN MAXIMUM LOAD CARRYING CAPACITY.
5. ALL METAL HANGERS AND CONNECTORS SHALL BE "SIMPSON" OR EQUAL.
6. SECURE SILL PLATE TO CONCRETE WITH 5/8" DIA. X 12" A.B. @ 32" O.C. UNLESS NOTED OTHERWISE ON PLAN.
7. DOUBLE TOP AND BOTTOM PLATES TO BE LAPPED 4'-0" AT SPLICE AND CONNECT WITH 16D COMMON NAILS @ 3" O.C., STAGGERED.
8. NOTCHING OR DRILLING THROUGH ANY LUMBER MEMBER WILL NOT BE ALLOWED WITHOUT SPECIFIC APPROVAL OF STRUCTURAL ENGINEER.

WOOD FRAMING NOTES CONT.

9. ROOF SHEATHING:
   A. (5/8)" A.P.A. RATED STRUCTURAL II, EXTERIOR, PANEL INDEX #32/16, UNLESS NOTED OTHERWISE
   B. NAIL WITH: 10d @ 6" O.C. – PANEL EDGES, UNLESS NOTED OTHERWISE
      10d @ 12" O.C. – ALL ELSE, UNLESS NOTED OTHERWISE
   C. INSTALL ROOF SHEATHING WITH "H" CLIPS.
10. KEEP ALL MATERIAL CLEARLY IDENTIFIED WITH ALL GRADE MARKS LEGIBLE. KEEP ALL DAMAGED MATERIAL CLEARLY IDENTIFIED AS DAMAGED AND SEPARATELY STORED TO PREVENT ITS INADVERTENT USE. IN THE EVENT OF DAMAGE, IMMEDIATELY MAKE ALL REPAIRS AND REPLACEMENTS NECESSARY TO THE APPROVAL OF THE ENGINEER AND AT NO ADDITIONAL COST TO THE OWNER.
11. PROVIDE 3"X3"X1/4" SLOTTED PLATE WASHERS AT ALL BOLTS IN PLATES, AND 2" DIAMETER PLATE WASHERS AT ALL BOLTS IN LEDGERS, BEAMS, AND COLUMNS. UNLESS OTHERWISE SPECIFIED, USE A307 BOLTS.
12. PROVIDE SOLID BLOCKING UNDER ALL LOCATIONS WHERE CONCENTRATED LOADS ARE LOCATED, SUCH AS COLUMNS, POSTS, BEAMS, ETC. FULL SUPPORT MUST BE PROVIDED TO THE FOUNDATION.

WOOD TRUSSES NOTES

1. DESIGN TRUSSES FOR FOLLOWING CRITERIA:
   LIVE LOAD = 40 PSF (SNOW) LIVE LOAD DEFLECTION = L/360 MAXIMUM
   DEAD LOAD = 20 PSF
   UNBALANCED SNOW/LIVE LOAD = 55 PSF
   NOTE: ALL TRUSSES TO BE DESIGNED FOR DRIFT LOADS PER ASCE-7.
2. PROVIDE BRIDGING AT TOP AND BOTTOM CHORDS AND STRUT BRACING, PER MANUFACTURER'S RECOMMENDATIONS.
3. NO STRESS INCREASE ALLOWED FOR TRUSS DESIGN.
4. DESIGN AND FABRICATION OF ALL TRUSSES SHALL COMPLY WITH REQUIREMENTS OF DESIGN SPECIFICATIONS FOR LIGHT METAL PLATE CONNECTED WOOD TRUSSES' BY THE TRUSS PLATE INSTITUTE.
5. TRUSS MANUFACTURER SHALL DESIGN AND FABRICATE TRUSSES TO SUPPORT LOADS SHOWN ON DRAWINGS. COORDINATE DESIGN WITH ALL MECHANICAL EQUIPMENT AND SUSPENDED LOADS. SUBMIT DESIGN CALCULATIONS BEARING STAMP OF A REGISTERED PROFESSIONAL ENGINEER LICENSED BY THE STATE OF UTAH.
6. SUBMIT SHOP DRAWINGS FOR REVIEW PRIOR TO FABRICATION INDICATING FRAMING PLAN, BRIDGING AND BRACING, DIAGRAM OF THE TRUSSES WITH DIMENSIONS, SIZE AND GRADE OF MEMBERS, SIZE AND LOCATION OF METAL PLATES, BEARING DETAILS AND INSTRUCTION FOR INSTALLATION.
7. MOMENT COEFFICIENTS SHALL BE 1/8 FOR ONE AND TWO CONTINUOUS SPAN CONDITIONS AND 1/10 FOR THREE OR MORE CONTINUOUS SPAN CONDITIONS. LENGTH FACTOR FOR WEB DESIGN SHALL BE ONE. METAL PLATES AT COMPRESSION JOINTS SHALL BE DESIGNED FOR THE FULL LOAD WITHOUT CONSIDERING WOOD TO WOOD BEARING.
8. ALL METAL PLATE DIMENSIONS SHALL BE INCREASED BY 10% ABOVE THAT REQUIRED BY THE ANALYSIS. ALLOWABLE STRESS FOR METAL PLATE SHALL NOT BE INCREASED FOR THE LOAD DURATION. METAL PLATES SHALL BE PRESSED OR ROLLED INTO MEMBERS TO OBTAIN FULL PENETRATION WITHOUT CRUSHING THE WOOD SURFACE.
9. ALL METAL PLATES SHALL BE GALVANIZED STEEL AND SHALL BE ON BOTH SIDES OF EACH CONNECTION. SUBMIT A COPY OF THE I.C.B.O APPROVAL, INCLUDING ALLOWABLE STRESSES ESTABLISHED BY THIS COMMITTEE, FOR METAL PLATES USED.
10. ALL LUMBER SHALL BE DOUGLAS FIR OR YELLOW PINE #1 GRADE. MOISTURE CONTENT SHALL NOT EXCEED 19% NOR SHALL BE LESS THAN 7%. HANDLING, STORAGE AND INSTALLATION OF ALL TRUSSES SHALL BE DONE SUCH THAT THE SPECIFIED MINIMUM AND MAXIMUM MOISTURE CONTENT LIMITS ARE NOT EXCEEDED. GRADE STAMPS SHALL APPEAR ON ALL MEMBERS.
11. PRIOR TO FABRICATION, CONTRACTOR SHALL SUBMIT IN WRITING PROOF OF COMPLIANCE OF IN PLANT INSPECTION BY AN I.C.B.O. APPROVED INDEPENDENT INSPECTION AGENCY.
12. A HURRICANE TIE IS TO BE INSTALLED AT EACH TRUSS TO TOP PLATE.
13. TRUSS MANUFACTURER IS RESPONSIBLE FOR ALL TRUSS HANGERS & CONNECTIONS.

SUBMITTALS:

1. THE FOLLOWING INFORMATION AND SUBMITTALS SHALL BE PROVIDED TO THE ENGINEER BEFORE FABRICATION AND/OR DELIVERY TO THE JOBSITE, NOT ALL MAY APPLY.
   A. CONCRETE MIX DESIGNS.
   B. CONCRETE REINFORCEMENT SHOP DRAWINGS.
   C. MASONRY SPECIFICATIONS.
   D. MASONRY MORTAR MIX DESIGNS.
   E. MASONRY REINFORCEMENT SHOP DRAWINGS.
   F. STRUCTURAL BACKFILL PIT LOCATION AND MATERIAL SPECIFICATION, IF USED ON SITE.
   G. STRUCTURAL STEEL SHOP DRAWINGS.
   H. OPEN WEB ROOF TRUSSES, SHOP DRAWINGS FROM MANUFACTURER.
   I. OTHER SHOP DRAWINGS & SUBMITTALS AS DEEMED NECESSARY BY THE ENGINEER.

SOIL NOTES

1. ALL ORGANIC MATERIALS, RUBBISH, UNSUITABLE FILL, TOPSOIL, ETC. SHALL BE REMOVED FROM BENEATH LOCATIONS OF PROPOSED FOOTINGS, CONCRETE SLABS AND ASPHALT PAVING.
2. ALL FOOTINGS SHALL BE PLACED ON UNDISTURBED NATURAL SAND OR ON COMPACTED STRUCTURAL FILL EXTENDING DOWN TO THE UNDISTURBED NATURAL SAND. IMPORTED STRUCTURAL FILL SHALL BE COMPACTED TO 95% MAXIMUM RELATIVE DENSITY BASED ON ASTM D1557.
3. SLABS SHALL BE PLACED ON COMPACTED GRANULAR BACKFILL.
4. UNLESS OTHERWISE NOTED, STRUCTURAL BACKFILL SHALL CONFORM TO:
   A. IMPORTED GRANULAR MATERIAL SHALL BE FREE OF ORGANIC MATTER AND OTHER DELETERIOUS SUBSTANCES.
   B. SHALL COMPLY WITH SPECIFICATIONS FOR GRADATIONS.
5. ALL FREE WATER SHALL BE REMOVED FROM THE FOUNDATION EXCAVATION PRIOR TO PLACING CONCRETE.
6. EXTERIOR FOOTINGS AND GRADE BEAMS SHALL BE LOCATED AT LEAST 30" BELOW FINISHED GRADE, AND MAINTAIN 6" BETWEEN FINISH GRADE AND WOOD FRAMING
7. NO SOILS REPORT WAS PREPARED FOR THIS SITE.

ANCHOR NOTES:

1. ALL ANCHORS TO BE INSTALLED PER THE MANUFACTURER'S REQUIREMENTS. FOR BOTH MECHANICAL AND EPOXY TYPE ANCHORS THESE REQUIREMENTS INCLUDE, BUT IS NOT LIMITED TO:
   A. PROPER HOLE DIAMETER, DEPTH, EDGE DISTANCES, AND SPACING.
   B. PROPER HOLE PREPARATION AND CLEANOUT
   C. WEATHER REQUIREMENTS TO BE FOLLOWED, ESPECIALLY FOR COLD WEATHER APPLICATIONS.
   D. ALL STRUCTURAL ANCHORS TO COMPLY WITH THE CRACKED CONCRETE REQUIREMENTS OF THE CURRENT EDITION OF THE ACI 318.
2. ANY EPOXY TYPE ANCHOR IS TO MEET THE CURRENT ANSI/NSF 61 REQUIREMENTS FOR DRINKING WATER SYSTEM COMPONENTS, WHERE APPLICABLE.

SEISMIC BRACKETS:

1. CONTRACTOR TO PROVIDE, AND SUBMIT FOR REVIEW, AN APPROVAL FOR SEISMIC BRACKETS FOR HVAC, MECHANICAL AND ELECTRICAL EQUIPMENT WHICH SHALL MEET LOCAL CODES.

WATER PIPELINE NOTES

1. CONTACT SPRINGVILLE CITY AT LEAST 72 HOURS IN ADVANCE OF ALL WATER SHUTDOWNS.
2. ALL DUCTILE OR CAST IRON PIPE AND ALL COMPRESSION COUPLINGS,MECHANICAL JOINTS, FLANGED JOINTS, VALVES, HYDRANTS AND FITTINGS INCLUDING TEES, WYES, ELBOWS, PLUGS, ETC. EXPOSED TO SOIL SHALL BE WRAPPED WITH 8 MIL THICK POLYETHYLENE FILM TUBE. ALL FITTINGS, VALVES AND EXPOSED NUTS & BOLTS SHALL BE LIBERALLY COATED WITH FM GREASE PRIOR TO WRAPPING. THE FILM SHALL BE HELD IN PLACE BY 2-INCH WIDE PLASTIC BACKED ADHESIVE TAPE EQUAL TO POLYKEN NO. 900 OR SCOTCHRAP NO. 50. THE TAPE SHALL BE INSTALLED TO TIGHTLY SECURE THE FILM TO THE PIPE. ENOUGH FILM SHALL BE USED TO OVERLAP ADJOINING SECTION OF FILM A MINIMUM OF ONE (1) FOOT.
3. VALVE SHALL BE WRAPPED BY BRINGING THE WRAP ON THE ADJACENT PIPE OVER THE BELLS OR FLANGES OF THE VALVE AND SEALING WITH THE ADHESIVE TAPE. THE VALVE BODIES ARE THEN WRAPPED WITH A FLAT SHEET OF THE FILM PASSED UNDER THE VALVE BOTTOM AND BROUGHT UP AROUND THE BODY TO THE STEM AND FASTENED IN PLACE WITH THE ADHESIVE TAPE.
4. HYDRANTS SHALL BE WRAPPED WITH POLYETHYLENE TUBE SLIPPED OVER THE HYDRANT FROM THE LEAD IN VALVE TO THE GROUND LEVEL. TO PROVIDE DRAINAGE OF THE HYDRANT. IT IS NECESSARY TO CUT A SMALL HOLE IN THE FILM AND INSERT A SHORT PIPE NIPPLE TO DRAIN THE WATER TO THE SOIL OUTSIDE THE FILM WRAP.
5. ALL FITTING THAT REQUIRE CONCRETE BLOCKING SHOULD BE COMPLETELY WRAPPED PRIOR TO THE POURING OF THE CONCRETE THRUST BLOCK.
6. POLYETHYLENE WRAP SHALL BE PROTECTED FROM THE SUN AND WEATHERING PRIOR TO USE. CARE SHALL BE EXERCISED DURING BACK FILLING OF THE PROTECTED AREA TO PREVENT PUNCTURING OF THE FILM.
7. UNLESS OTHER WISE NOTED, ALL FITTING FOR PRESSURIZED WATER PIPING SHALL BE PROPERLY RESTRAINED BY THRUST BLOCKING AND MEGA-LUG.
8. CONTRACTOR SHALL POTHOLE ALL UTILITIES 200 FEET AHEAD OF CONSTRUCTION OF ANY PIPING TO FACILITATE ADJUSTMENT OF PIPELINE PROFILE TO AVOID CONFLICTS WITH UTILITIES.

PROFESSIONAL STRUCTURAL ENGINEER No. 2774619 ROBERT C. CONDER 1-30-19 STATE OF UTAH

PROFESSIONAL ENGINEER No. 196686-2202 VERN G. CONDER 1-30-19 STATE OF UTAH

FILE NAME: PROJECTS\260 – SPRINGVILLE CITY\44.200 400 S WELL NO. 2 PUMP HOUSE\CAD\WORKING\G-3 GENERAL NOTES.DWG
FILE DATE: 1.30.2019 16:25:19 (CAH)

HANSEN ALLEN & LUCE inc ENGINEERS

PROJECT ENGINEER

DESIGNED	VGC, RCC	3			
DRAFTED	BKC	2			
CHECKED	MEA, RCC	1			
DATE	JANUARY 2019	NO.	DATE	REVISIONS	BY / APVD.

SCALE: NOT TO SCALE

springville PUBLIC WORKS
110 S. MAIN ST
SPRINGVILLE, UTAH
84663

400 SOUTH WELL-NO. 2 WELL HOUSE
GENERAL
GENERAL NOTES

SHEET NO. G-3
260-44-200

6/01

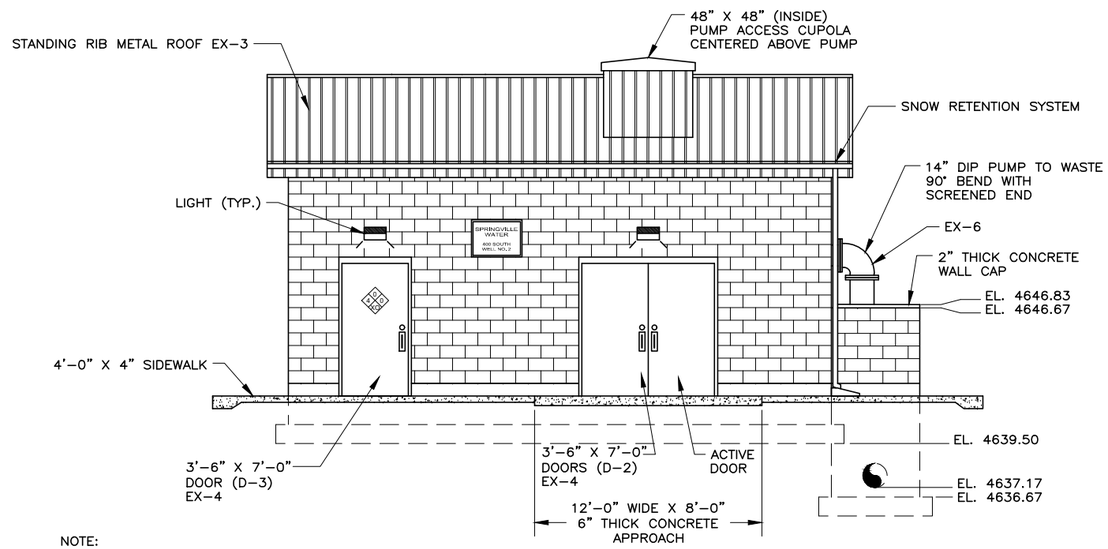

NOTE:
BUILDING PLAQUE BY OTHERS. COORDINATE W/ OWNER FOR INSTALLATION.

SOUTH ELEVATION

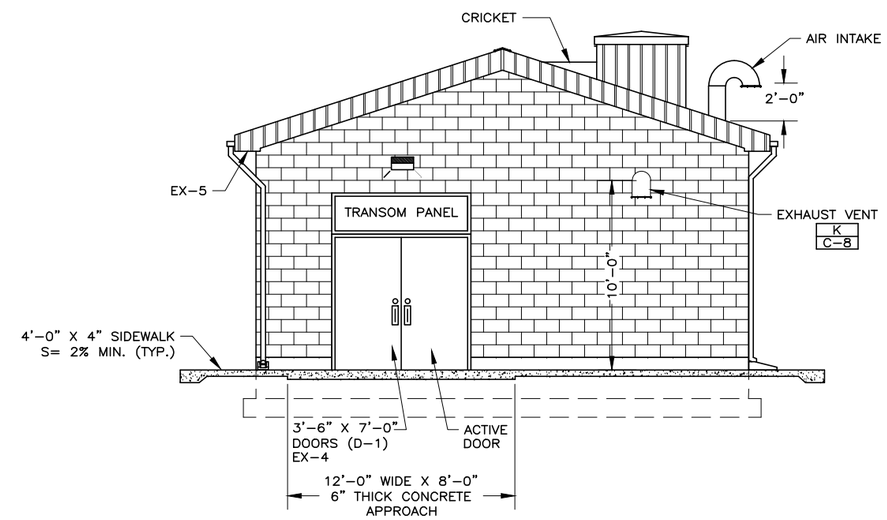

WEST ELEVATION

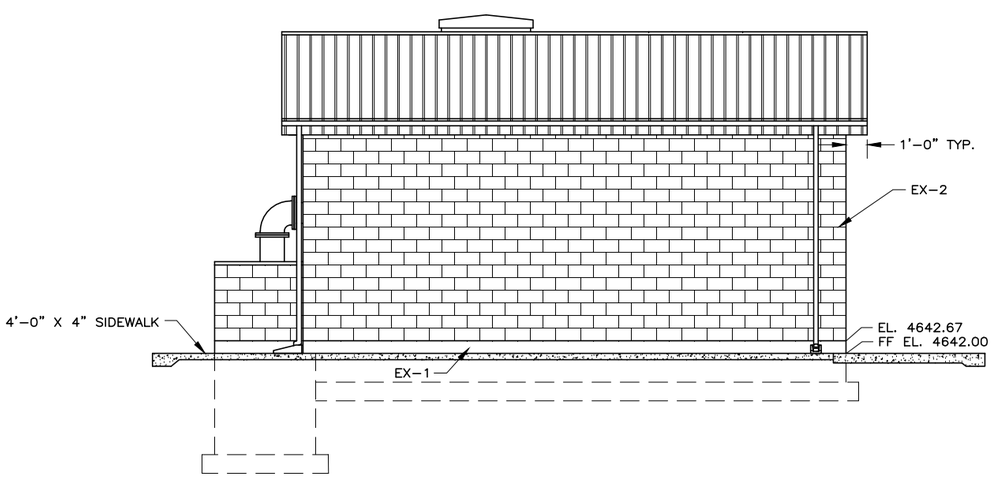

NORTH ELEVATION

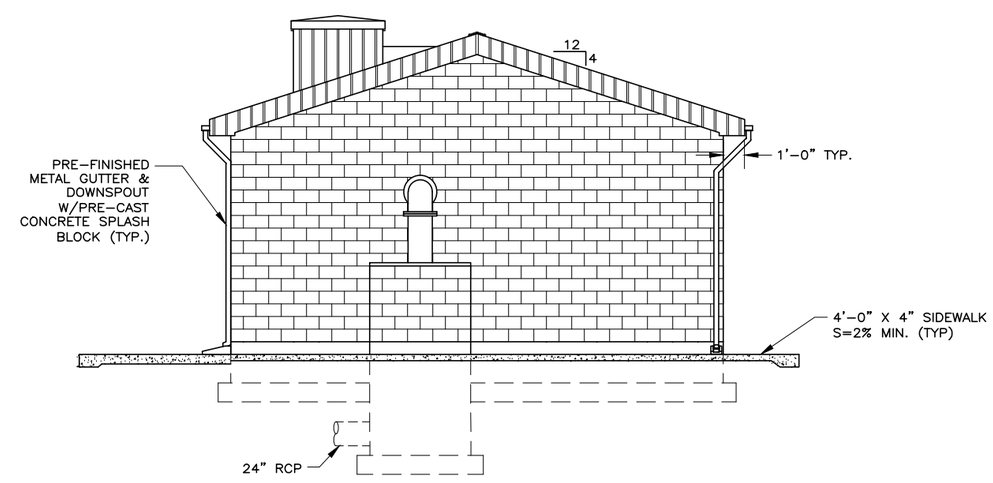

EAST ELEVATION

0 1 2 3 4
SCALE IN FEET

FILE NAME: PROJECTS\260 — SPRINGVILLE CITY\44.200 400 S WELL NO. 2 PUMP HOUSE\CAD\WORKING\A-1 ELEVATIONS.DWG
FILE DATE: 1.30.2019 12:09:14 (CAH)

HANSEN ALLEN & LUCE inc ENGINEERS

PROFESSIONAL ENGINEER No. 166865-2202 VERN G. CONDER 1-30-19 STATE OF UTAH

PROJECT ENGINEER

DESIGNED VGC	3					
DRAFTED BKC	2					
CHECKED MEA	1					
DATE JANUARY 2019	NO.	DATE	REVISIONS	BY	APVD.	

SCALE: AS SHOWN

springville PUBLIC WORKS
110 S. MAIN ST
SPRINGVILLE, UTAH
84663

400 SOUTH WELL-NO. 2 WELL HOUSE
ARCHITECTURAL
BUILDING ELEVATIONS

SHEET NO. A-1
260-44-200

6/01

WINDOW SCHEDULE

WINDOW TYPE	WINDOW OPENING SIZE			FRAME MAT.	FRAME FINISH	REMARKS
	WIDTH	HEIGHT	THICK			
W–1	2'–0"	2'–0"	1/8"	FRP	–	POLYCARBONATE WINDOW GLAZING

EXTERIOR COLOR SCHEDULE

MARK	MATERIAL	MANUFACTURER	FINISH	COLOR	REMARKS
EX–1	CONCRETE	GEN. CONTR.	STONE RUB	NATURAL	
EX–2	CMU	INTERSTATE	SPLIT	* OWNER	8"W X 8"H X 16"L
EX–3	METAL	SEE SPECIFICATIONS	FACTORY	* OWNER	STANDING SEAM (MATCH SPECIFICATIONS)
EX–4	EXT. PAINT	SHERWIN WILLIAMS	SEMI–GLOSS	* OWNER	DOORS AND FRAMES
EX–5	METAL	SEE SPECIFICATIONS	FACTORY	* OWNER	FASCIA/SOFFIT (MATCH SPECIFICATIONS)
EX–6	METAL	SEE SPECIFICATIONS	PAINT	* OWNER	

* COLOR & MORTAR TO MATCH EXISTING 400 SOUTH WELL STRUCTURE

INTERIOR PAINTING SCHEDULE

LOCATION	MATERIAL	COLOR	REMARKS
FLOOR	CONCRETE	GRAY	CLEAN AND PREPARE FLOOR, SIKAFLEX CONCRETE FLOOR EDGE
WALLS	MASONRY	WHITE INTERIOR	SEAL MASONRY (OUTSIDE WALLS) W/ GRAFFITI COAT
CEILING	PLYWOOD	WHITE	WITH BATTEN BOARDS
PIPING	METAL	BLUE	EXPOSED PIPE, VALVES & FITTINGS TO BE PAINTED PIPE TO HAVE MOCAP SEALS ON ALL EXPOSED BOLTS & NUTS

DOOR SCHEDULE

DOOR SIZE			DOOR TYPE	MAT.	FINISH	FRAME MAT.	FRAME FINISH	REMARKS
WIDTH	HEIGHT	THICK						
3'–6"	7'–0"	1–3/4"	D–1	HOL. MTL.	* OWNER	HOL. MTL. (INSULATED)	EX–4	METAL DOOR WITH TRANSOM PANEL
3'–6"	7'–0"	1–3/4"	D–2	HOL. MTL.	* OWNER	HOL. MTL. (INSULATED)	EX–4	
3'–6"	7'–0"	1–3/4"	D–3	HOL. MTL.	* OWNER	HOL. MTL. (INSULATED)	EX–4	

NOTES

1. SEE TECHNICAL SPECIFICATION SECTION 08 10 00 FOR HARDWARE & SECURITY REQUIREMENTS.
2. SEE TECHNICAL SPECIFICATION SECTION 09 91 00 FOR PAINTING AND FINISHES.
3. OWNER TO SELECT ARCHITECTURAL COLORS (MATCH EXISTING 400 SOUTH WELL HOUSE).
4. TRANSOM PANEL TO BE REMOVABLE HOLLOW METAL INSULATED.

PROFESSIONAL ENGINEER No. 196669-2202 VERN G. CONDER 1-30-19 STATE OF UTAH

PROJECT ENGINEER

HANSEN ALLEN & LUCE inc ENGINEERS

DESIGNED VGC
DRAFTED BKC
CHECKED MEA
DATE JANUARY 2019

NO.	DATE	REVISIONS	BY	APVD.
3				
2				
1				

SCALE AS SHOWN

springville PUBLIC WORKS

110 S. MAIN ST
SPRINGVILLE, UTAH
84663

400 SOUTH WELL–NO. 2 WELL HOUSE
ARCHITECTURAL
ARCHITECTURAL SCHEDULES

SHEET NO. A–2
260–44–200

FILE NAME: PROJECTS\260 – SPRINGVILLE CITY\44.200 400 S WELL NO. 2 PUMP HOUSE\CAD\WORKING\A–2 WELL HOUSE SCHEDULES.DWG
FILE DATE: 1.30.2019 12:10:40 (CAH)

6/01

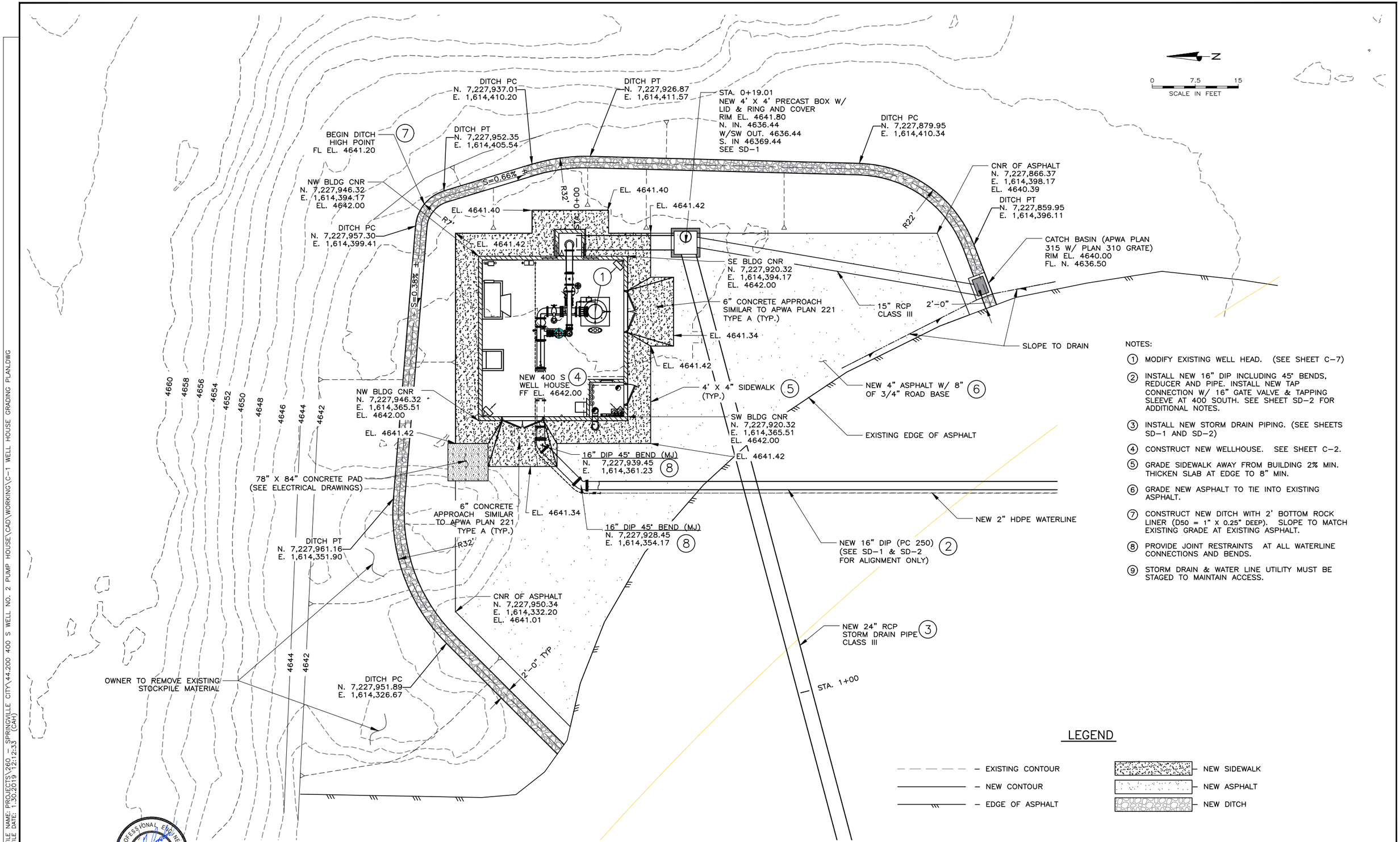

NOTES:

1. MODIFY EXISTING WELL HEAD. (SEE SHEET C-7)
2. INSTALL NEW 16" DIP INCLUDING 45° BENDS, REDUCER AND PIPE. INSTALL NEW TAP CONNECTION W/ 16" GATE VALVE & TAPPING SLEEVE AT 400 SOUTH. SEE SHEET SD-2 FOR ADDITIONAL NOTES.
3. INSTALL NEW STORM DRAIN PIPING. (SEE SHEETS SD-1 AND SD-2)
4. CONSTRUCT NEW WELLHOUSE. SEE SHEET C-2.
5. GRADE SIDEWALK AWAY FROM BUILDING 2% MIN. THICKEN SLAB AT EDGE TO 8" MIN.
6. GRADE NEW ASPHALT TO TIE INTO EXISTING ASPHALT.
7. CONSTRUCT NEW DITCH WITH 2' BOTTOM ROCK LINER (D50 = 1" X 0.25" DEEP). SLOPE TO MATCH EXISTING GRADE AT EXISTING ASPHALT.
8. PROVIDE JOINT RESTRAINTS AT ALL WATERLINE CONNECTIONS AND BENDS.
9. STORM DRAIN & WATER LINE UTILITY MUST BE STAGED TO MAINTAIN ACCESS.

FILE NAME: PROJECTS\260 - SPRINGVILLE CITY\44.200 400 S WELL NO. 2 PUMP HOUSE\CAD\WORKING\C-1 WELL HOUSE GRADING PLAN.DWG
FILE DATE: 1.30.2019 12:12:33 (CAH)

HANSEN ALLEN & LUCE INC. ENGINEERS

PROFESSIONAL ENGINEER No. 186685-2202 VERN G. CONDER 1-30-19 STATE OF UTAH

PROJECT ENGINEER

DESIGNED VGC	3				
DRAFTED BKC	2				
CHECKED MEA	1				
DATE JANUARY 2019	NO.	DATE	REVISIONS	BY	APVD.

SCALE AS SHOWN

springville PUBLIC WORKS
110 S. MAIN ST
SPRINGVILLE, UTAH
84663

400 SOUTH WELL-NO. 2 WELL HOUSE
CIVIL
SITE GRADING PLAN

SHEET NO. C-1
260-44-200

6/01

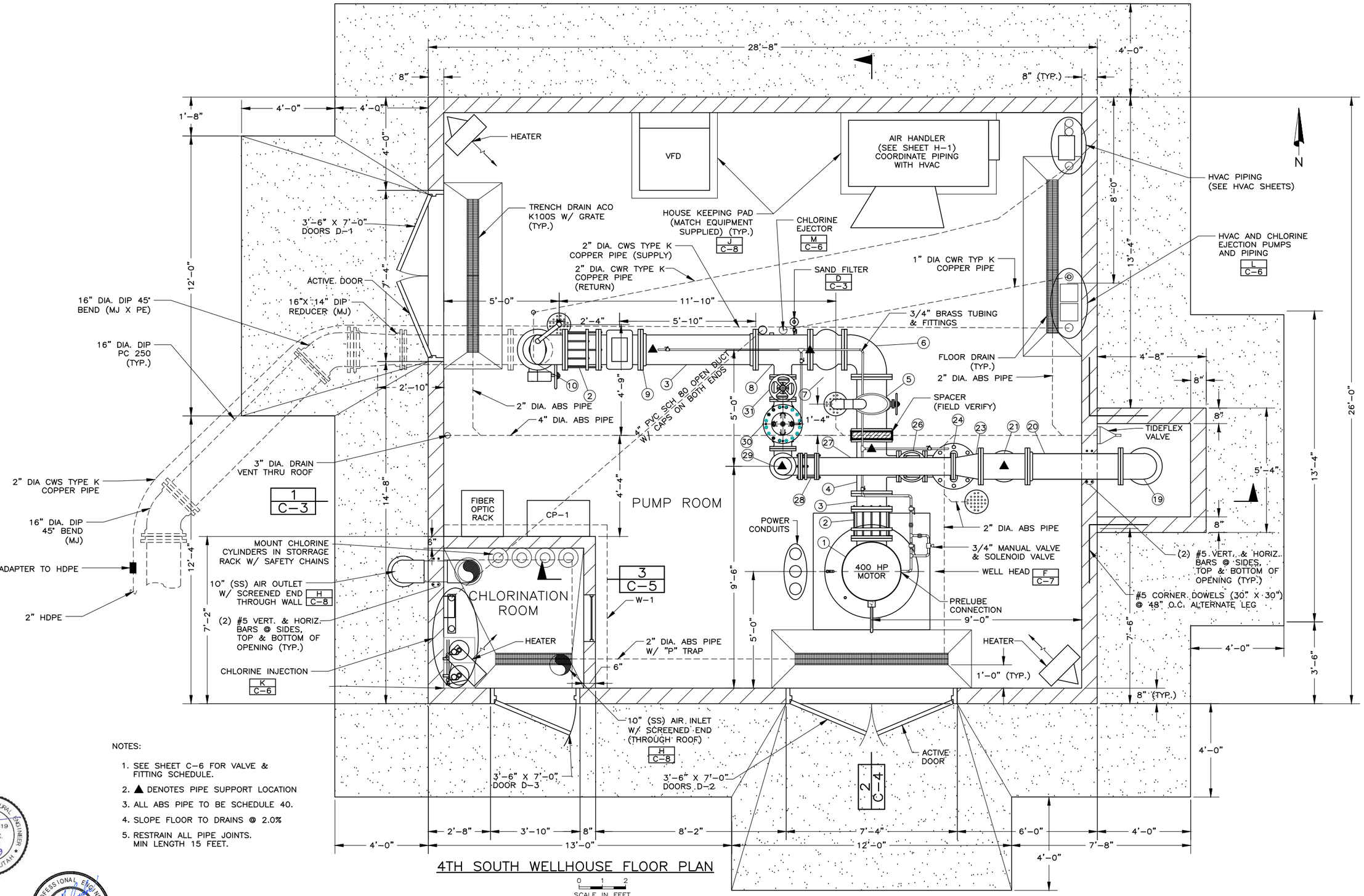

NOTES:

1. SEE SHEET C-6 FOR VALVE & FITTING SCHEDULE.
2. ▲ DENOTES PIPE SUPPORT LOCATION
3. ALL ABS PIPE TO BE SCHEDULE 40.
4. SLOPE FLOOR TO DRAINS @ 2.0%
5. RESTRAIN ALL PIPE JOINTS. MIN LENGTH 15 FEET.

4TH SOUTH WELLHOUSE FLOOR PLAN

0 1 2
SCALE IN FEET

PROFESSIONAL STRUCTURAL ENGINEER No. 2774619 ROBERT C. CONDER 1-30-19 STATE OF UTAH

PROFESSIONAL ENGINEER No. 386862-2202 VERN G. CONDER 1-30-19 STATE OF UTAH

FILE NAME: PROJECTS\260 - SPRINGVILLE CITY\44.200 400 S WELL NO. 2 PUMP HOUSE\CAD\WORKING\C-2 FLOOR PLAN.DWG
FILE DATE: 1.30.2019 16:18:55 (CAH)

HANSEN ALLEN & LUCE INC. ENGINEERS

PROJECT ENGINEER

DESIGNED	VGC	RCC
DRAFTED	BKC	
CHECKED	MEA	RCC
DATE	JANUARY 2019	

NO.	DATE	REVISIONS	BY	APVD.
3				
2				
1				

SCALE: AS SHOWN

springville PUBLIC WORKS
110 S. MAIN ST
SPRINGVILLE, UTAH
84663

400 SOUTH WELL-NO. 2 WELL HOUSE
CIVIL
FLOOR PLAN

SHEET NO. C-2
260-44-200

6/01

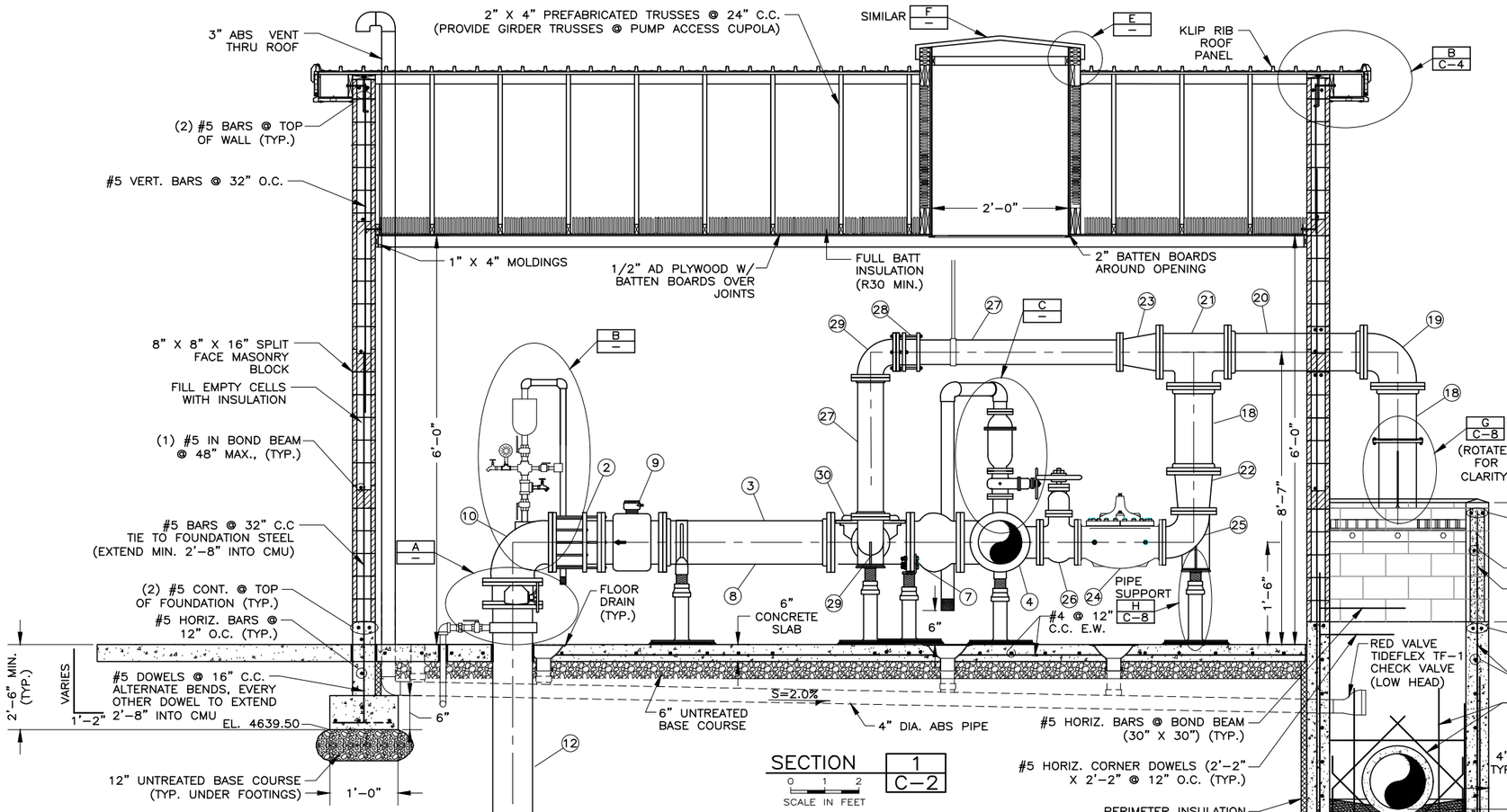

SECTION 1 / C-2

0 1 2 SCALE IN FEET

NOTE: SEE SHEET C-6 FOR VALVE & FITTING SCHEDULE.

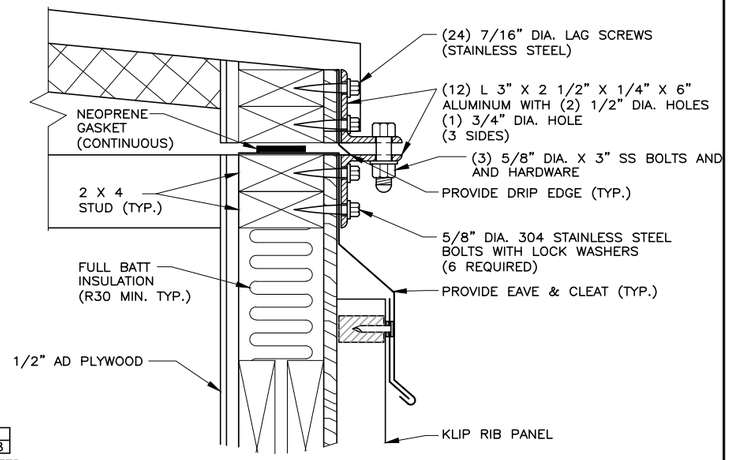

PUMP ACCESS FASTENER DETAIL E / —
N.T.S.

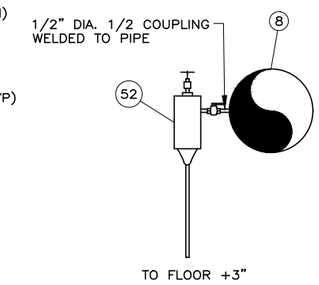

SAND FILTER DETAIL D / C-2
N.T.S.

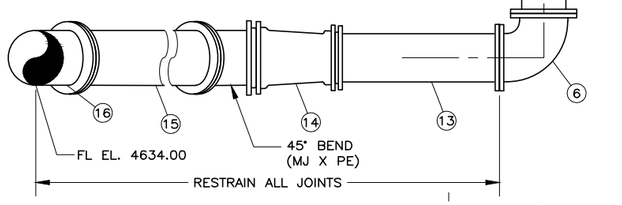

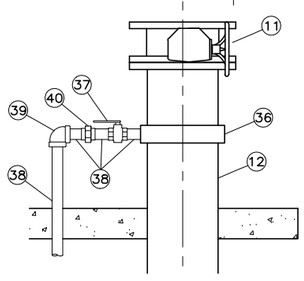

NOTE:
2" PIPING ROTATED FOR CLARITY.
SEE FLOOR PLAN FOR LOCATION

AIR-VAC TREE DETAIL A / —
N.T.S.

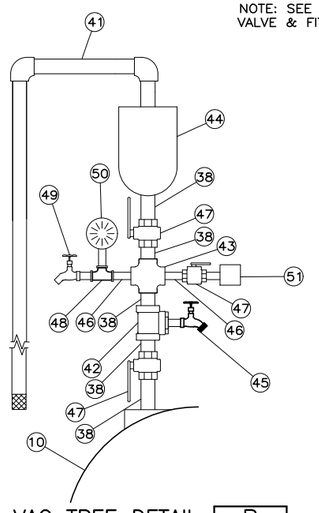

AIR-VAC TREE DETAIL B / —
N.T.S.

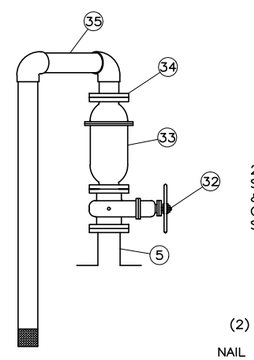

AIR-VAC DETAIL C / — C / C-4
N.T.S.

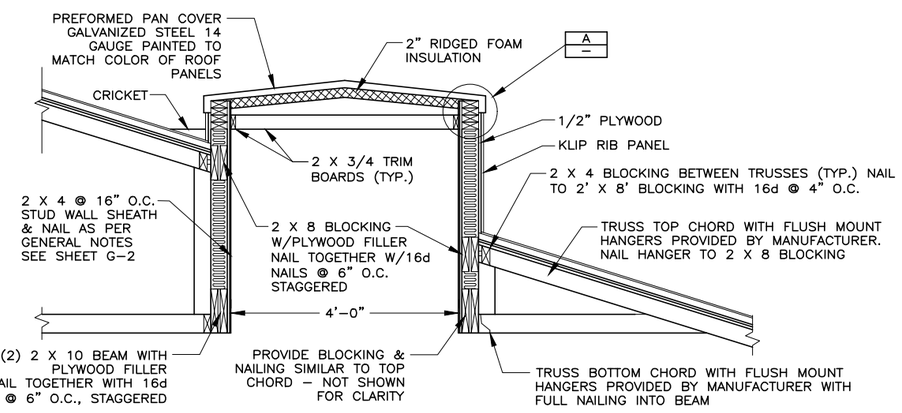

PUMP ACCESS DETAIL F / —
N.T.S.

FILE NAME: PROJECTS\260 – SPRINGVILLE CITY\44.200 400 S WELL NO. 2 PUMP HOUSE\CAD\WORKING\C-3 BUILDING SECTION AND DETAILS.DWG
FILE DATE: 1.30.2019 16:19:48 (CAH)

PROFESSIONAL STRUCTURAL ENGINEER No. 2774619 ROBERT C. CONDER 1-30-19 STATE OF UTAH

PROFESSIONAL ENGINEER No. 386868-2202 VERN G. CONDER 1-30-19 STATE OF UTAH

HANSEN ALLEN & LUCE INC. ENGINEERS

PROJECT ENGINEER

DESIGNED	VGC	RCC
DRAFTED	BKC	
CHECKED	MEA	RCC
DATE	JANUARY 2019	

NO.	DATE	REVISIONS	BY	APVD.
3				
2				
1				

SCALE: AS SHOWN

springville PUBLIC WORKS
110 S. MAIN ST
SPRINGVILLE, UTAH
84663

400 SOUTH WELL–NO. 2 WELL HOUSE
CIVIL
BUILDING SECTION AND DETAILS

SHEET NO. C-3
260-44-200

6/01

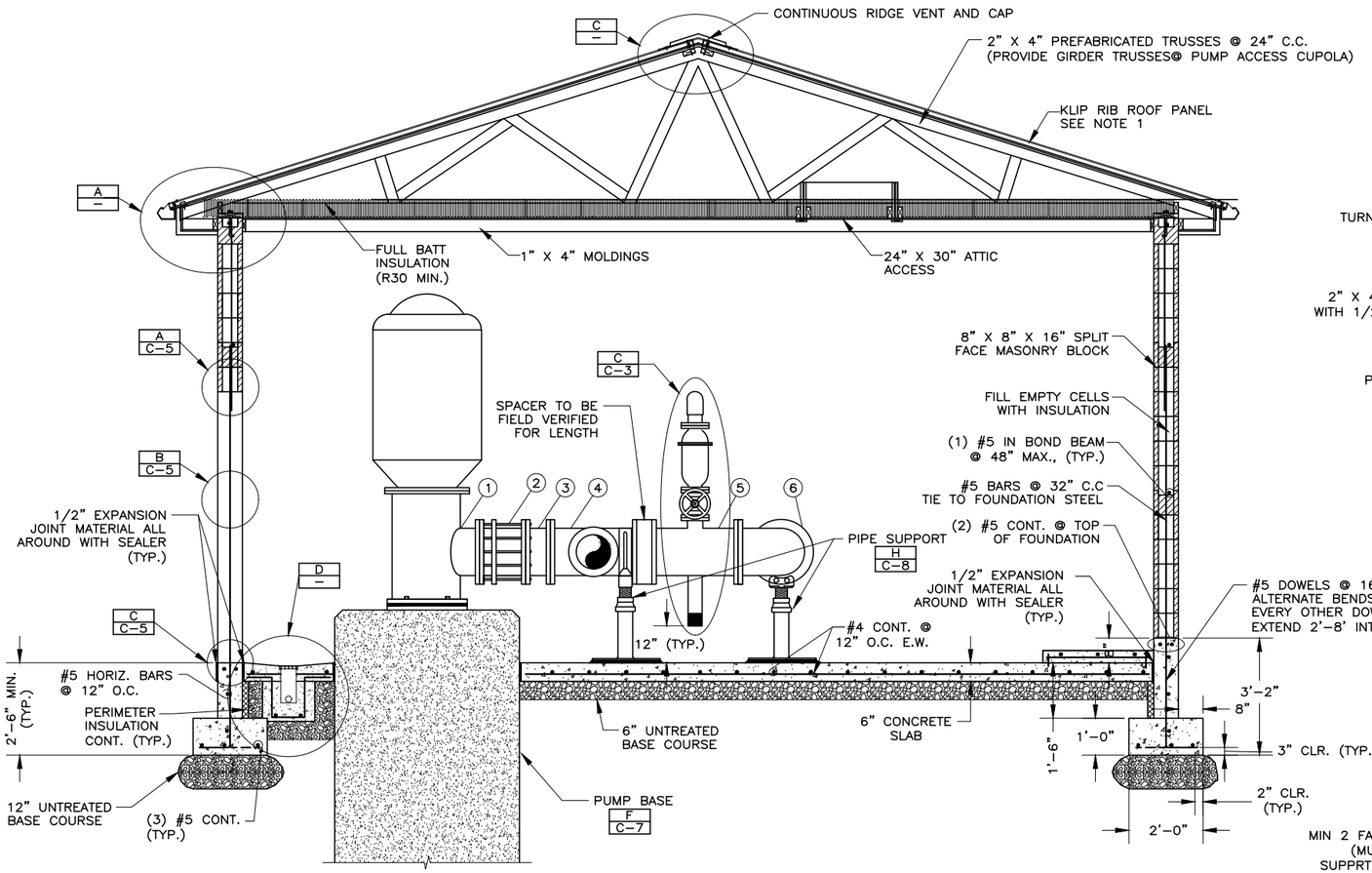

SECTION 2 / C-2

0 1 2
SCALE IN FEET

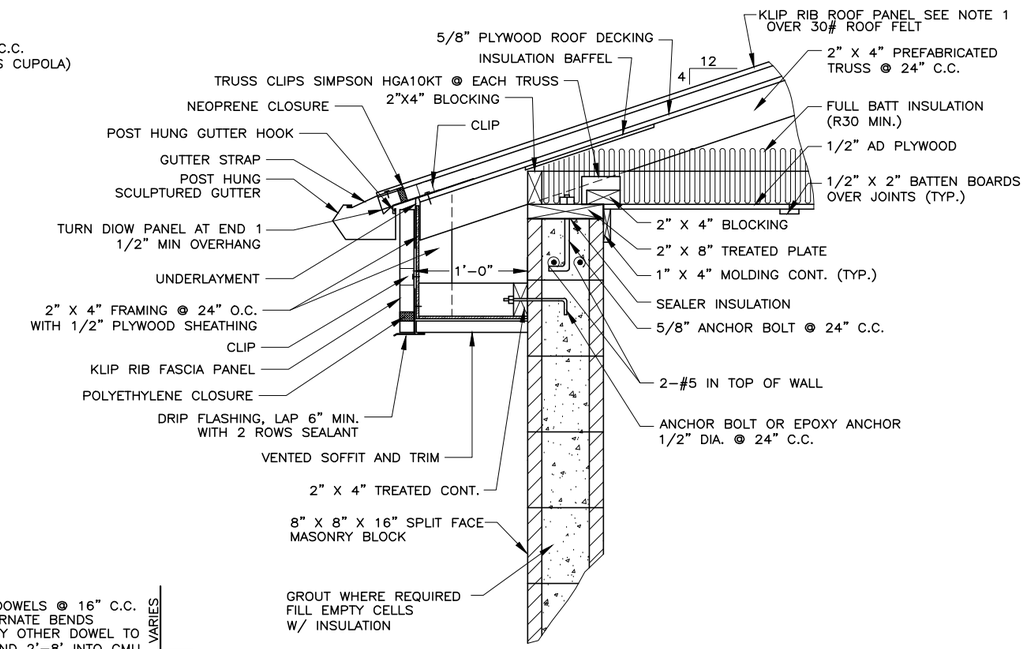

DETAIL A / —
N.T.S

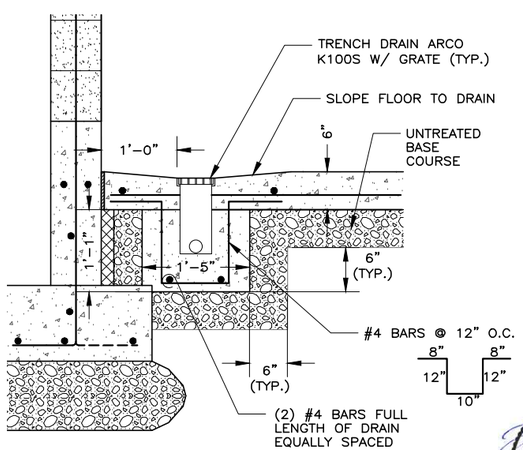

FLOOR DRAIN D / —
N.T.S

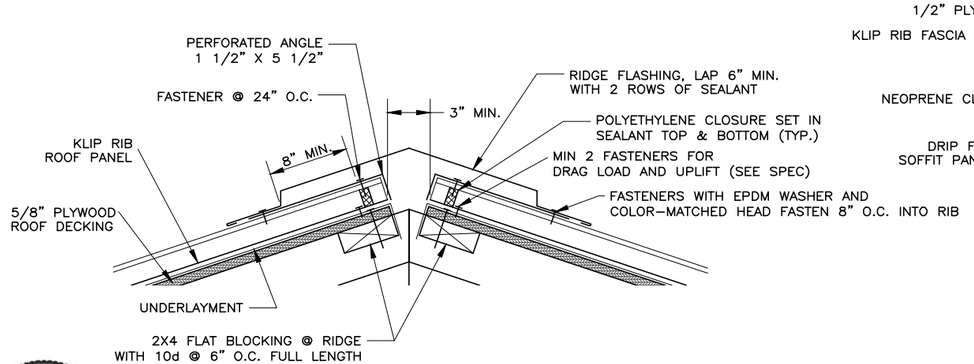

RIDGE VENT DETAIL C / —
N.T.S.

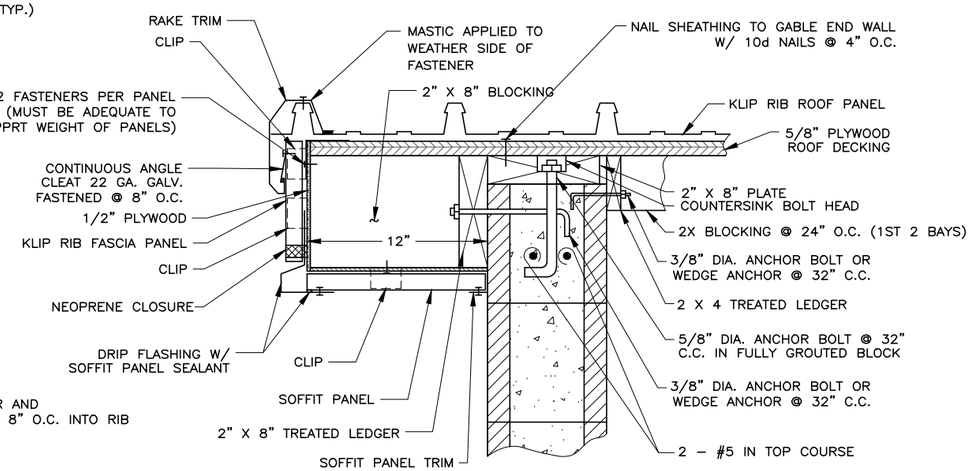

TYPICAL GABLE DETAIL B / C-3
N.T.S.

NOTE:
1. ROOFING SYSTEM COLOR TO BE SELECTED BY OWNER.
INSTALL ROOFING SYSTEM PER MANUFACTURER'S RECOMMENDATIONS.

FILE NAME: PROJECTS\260 — SPRINGVILLE CITY\44.200 400 S WELL NO. 2 PUMP HOUSE\CAD\WORKING\C-4 BUILDING SECTION AND DETAILS.DWG
FILE DATE: 1.30.2019 16:20:53 (CAH)

HANSEN ALLEN & LUCE INC. ENGINEERS

PROFESSIONAL STRUCTURAL ENGINEER No. 2774619 ROBERT C. CONDER 1-30-19 STATE OF UTAH

PROFESSIONAL ENGINEER No. 166666-2202 VERN G. CONDER 1-30-19 STATE OF UTAH
PROJECT ENGINEER

DESIGNED	VGC RCC
DRAFTED	BKC
CHECKED	MEA RCC
DATE	JANUARY 2019

NO.	DATE	REVISIONS	BY	APVD.
3				
2				
1				

SCALE
AS SHOWN

springville PUBLIC WORKS
110 S. MAIN ST
SPRINGVILLE, UTAH
84663

400 SOUTH WELL-NO. 2 WELL HOUSE
CIVIL
BUILDING SECTION AND DETAILS

SHEET NO.
C-4
260-44-200

6/01

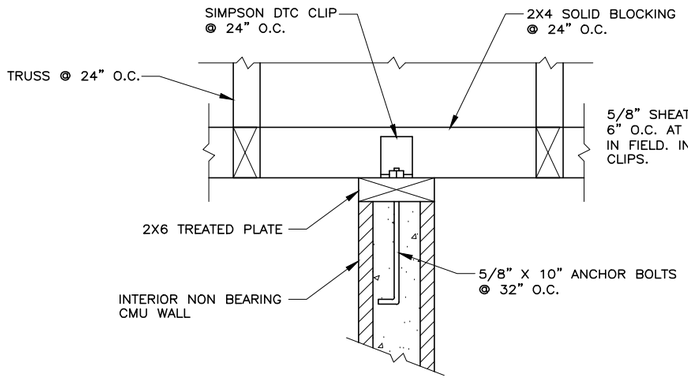

INTERIOR WALL PARALLEL TO TRUSS

SECTION 1 / —
N.T.S.

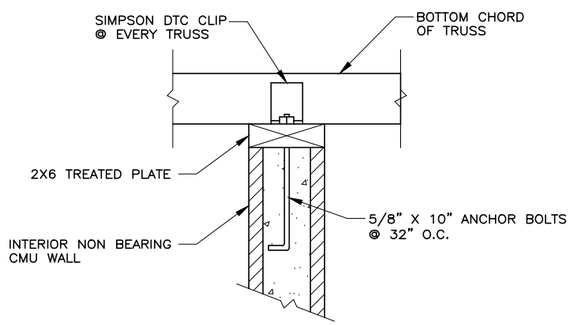

INTERIOR WALL PERPENDICULAR TO TRUSS

SECTION 2 / —
N.T.S.

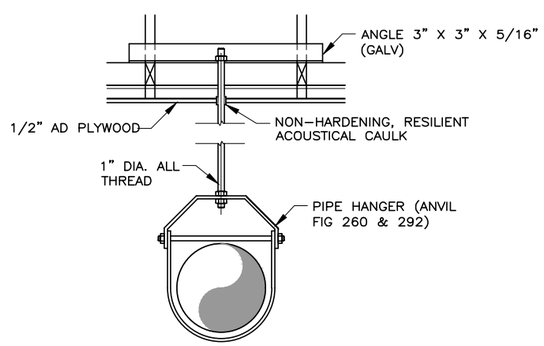

PIPE HANGER BRACKET A / —

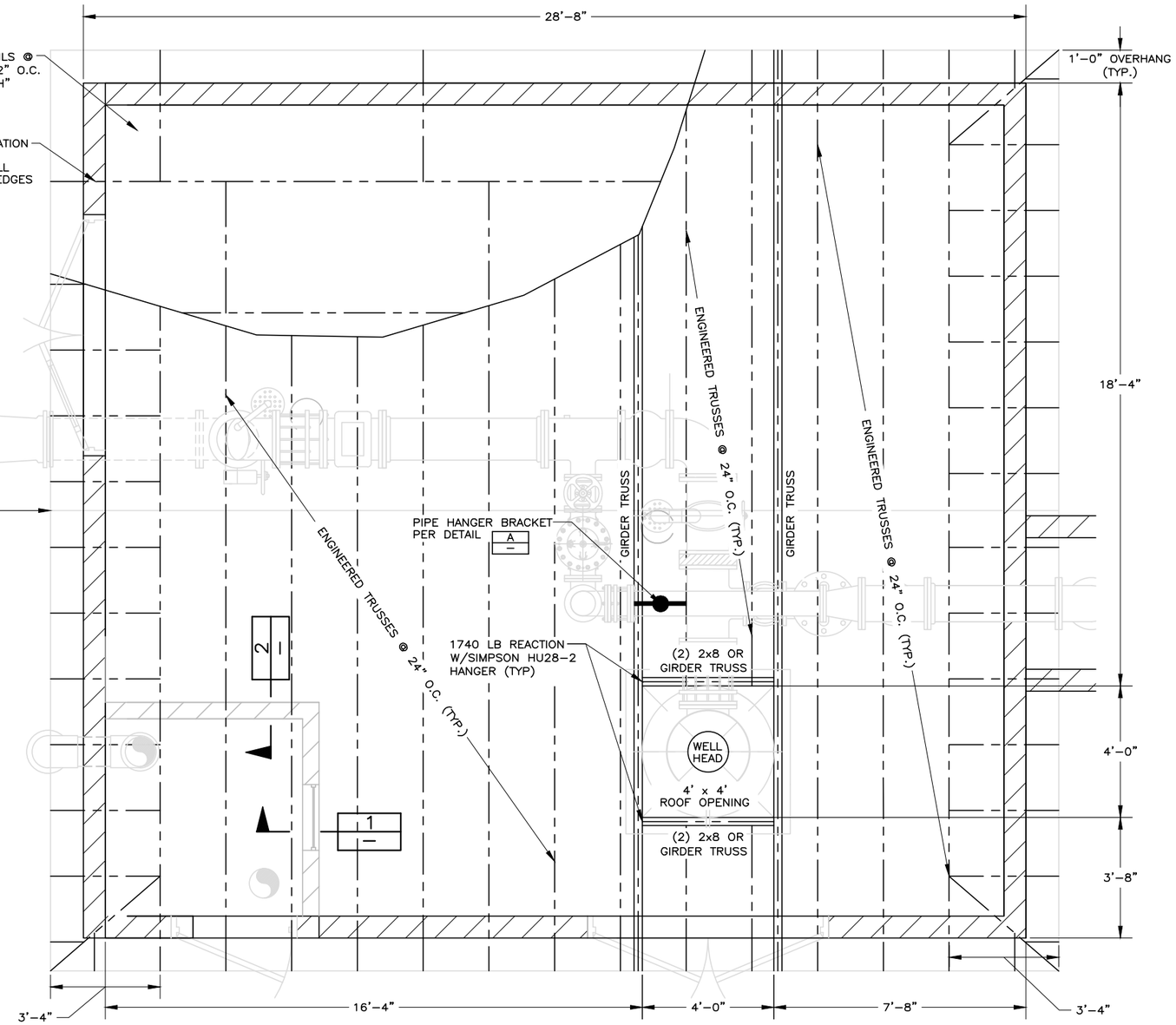

4TH SOUTH WELLHOUSE FRAMING PLAN

0 1 2
SCALE IN FEET

ROOF DESIGN LOADS

ROOF DESIGN LOAD: 20 PSF

ROOF LIVE LOAD * : 40 PSF

UNBALANCE ROOF LIVE LOAD: 55 PSF

* NOTES:

1. TRUSS MANUFACTURER TO PROVIDE ALL TRUSS TO TRUSS CONNECTIONS.
2. TRUSS DEFLECTION TO BE LIMITED TO L/360.

PROFESSIONAL STRUCTURAL ENGINEER No. 2774619 ROBERT C. CONDER 1-30-19 STATE OF UTAH

PROFESSIONAL ENGINEER No. 1306652202 VERN C. CONDER 1-30-19 STATE OF UTAH

FILE NAME: PROJECTS\260 — SPRINGVILLE CITY\44.200 400 S WELL NO. 2 PUMP HOUSE\CAD\WORKING\C-4A ROOF FRAMING.DWG
FILE DATE: 1.30.2019 16:21:41 (CAH)

HANSEN ALLEN & LUCE inc ENGINEERS

PROJECT ENGINEER

DESIGNED	VGC	RCC	3			
DRAFTED	BKC		2			
CHECKED	MEA	RCC	1			
DATE	JANUARY 2019		NO.	DATE	REVISIONS	BY / APVD.

SCALE: AS SHOWN

springville PUBLIC WORKS
110 S. MAIN ST
SPRINGVILLE, UTAH
84663

400 SOUTH WELL-NO. 2 WELL HOUSE
CIVIL
ROOF FRAMING

SHEET NO. C-4A
260-44-200

6/01

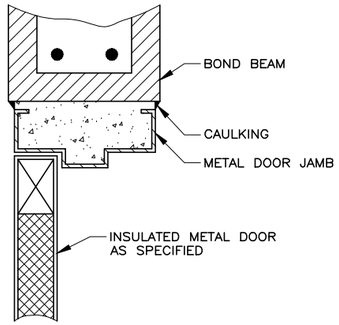

DOOR HEAD | A / C–4
N.T.S.

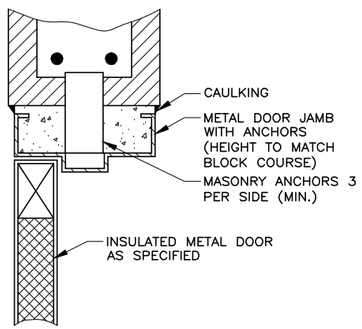

DOOR JAMB | B / C–4
N.T.S.

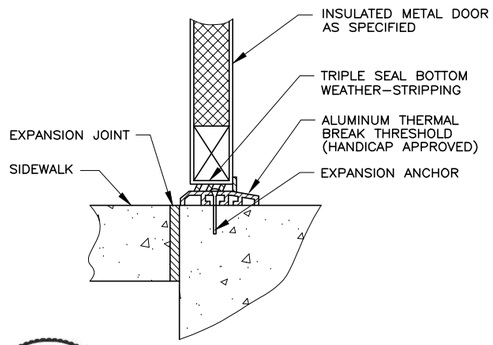

DOOR SILL | C / C–4
N.T.S.

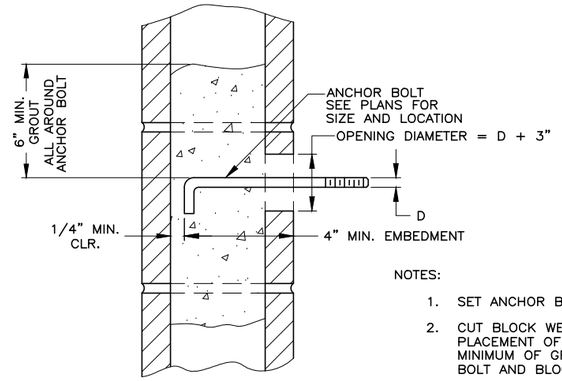

NOTES:

1. SET ANCHOR BOLTS WITH TEMPLATE.
2. CUT BLOCK WEB AS REQUIRED TO ALLOW PLACEMENT OF ANCHOR BOLT AND 1/2" MINIMUM OF GROUT BETWEEN ANCHOR BOLT AND BLOCK.

ANCHOR BOLTS IN MASONRY
N.T.S.

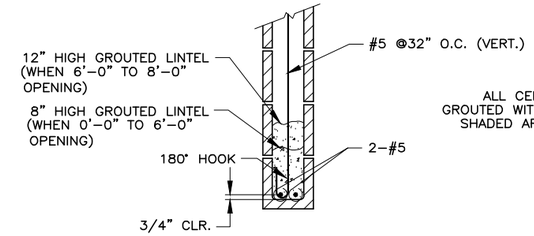

INTERIOR NONBEARING WALL OPENING
(NO ROOF OR FLOOR LOAD)
N.T.S.

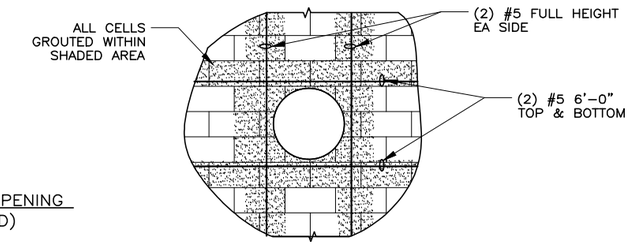

PIPE PENETRATION THROUGH
MASONRY WALLS
N.T.S.

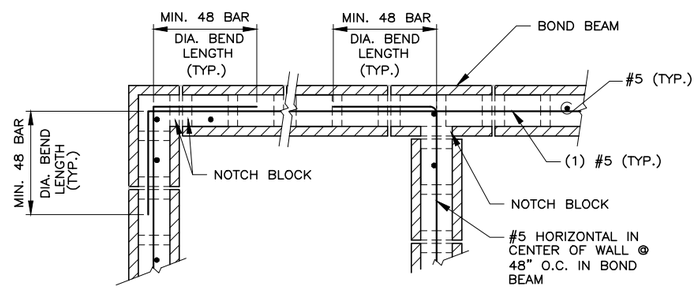

SEE MASONRY NOTES

MASONRY WALL REINFORCING
AT TYPICAL BOND BEAM
N.T.S.

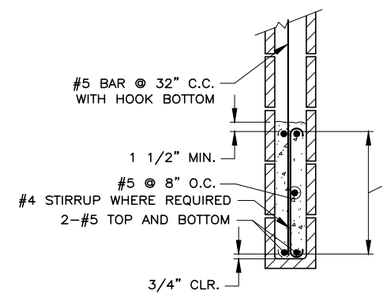

HT.	CLEAR OPENING
8"	1'–0" – 3'–0"
16"	3'–1" – 5'–4"
20"	5'–5" – 8'–0"
24"	8'–1" – 10'–0"
28"	10'–1" – 12'–0"

EXTERIOR OR BEARING WALL

MASONRY LINTEL DETAILS
AT WALL OPENINGS
N.T.S.

NOTES:

1. EXTEND REINF. & BOND BEAM MIN. 48 DIAMETERS EACH END OF OPENING.
2. FILL HEAD JOINTS AND GROUT SOLID.
3. USE #4 @ 8" O.C. WHEN HT. IS 20" OR MORE
4. PROVIDE 180° HOOK @ END OF OF VETICAL BARS WHEN STIRRUPS ARE NOT USED.

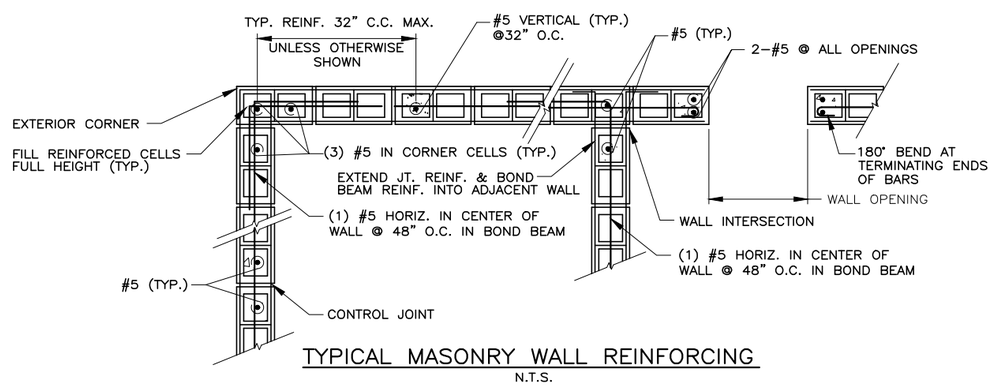

TYPICAL MASONRY WALL REINFORCING
N.T.S.

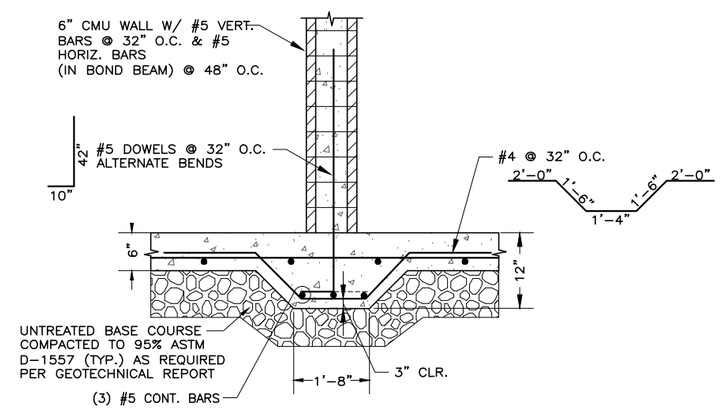

THICKENED SLAB FOR MASONRY | 3
INTERIOR NON–BEARING WALL | C–2
N.T.S.

PROFESSIONAL STRUCTURAL ENGINEER No. 2774619 ROBERT C. CONDER 1-30-19 STATE OF UTAH

PROFESSIONAL ENGINEER No. 166666-2202 VERN G. CONDER 1-30-19 STATE OF UTAH

FILE NAME: PROJECTS\260 – SPRINGVILLE CITY\44.200 400 S WELL NO. 2 PUMP HOUSE\CAD\WORKING\C–5 BUILDING DETAILS.DWG
FILE DATE: 1.30.2019 16:22:23 (CAH)

HANSEN ALLEN & LUCE inc. ENGINEERS

PROJECT ENGINEER

DESIGNED	VGC, RCC	3			
DRAFTED	BKC	2			
CHECKED	MEA, RCC	1			
DATE	JANUARY 2019	NO.	DATE	REVISIONS	BY / APVD.

SCALE: AS SHOWN

springville PUBLIC WORKS
110 S. MAIN ST
SPRINGVILLE, UTAH
84663

400 SOUTH WELL–NO. 2 WELL HOUSE
CIVIL
BUILDING DETAILS

SHEET NO. C–5
260–44–200

6/01

VALVE & FITTING SCHEDULE

NO.	DESCRIPTION	SIZE	JOINT
1.	PUMP DISCHARGE HEAD (SEE SHEET C-7)	14"	FLG
2.	FLANGE COUPLING ADAPTER (W/ TIE RODS)	14"	FLG
3.	SPOOL	14"	FLG
4.	TEE	14" X 10"	FLG
5.	TEE	14" X 4"	FLG
6.	90° BEND	14"	FLG
7.	CHECK VALVE (SILENT)	14"	FLG
8.	TEE	14" X 8"	FLG
9.	MAGNETIC FLOW METER (SEE SPECS)	14"	FLG
10.	90° BEND W/ WELD-O-LET	14"	FLG
11.	BUTTERFLY VALVE	14"	FLG
12.	SPOOL W/ 2" TAP	14"	FLG
13.	PIPE – DIP	16"	FLG X PE
14.	REDUCER – DIP	16" X 14"	MJ
15.	PIPE – DIP	16"	PE
16.	45° BEND	16"	MJ
17.	OUTLET NIPPLE W/ SLOT	12"	FLG X PE
18.	SPOOL	12"	FLG
19.	90° BEND	12"	FLG
20.	SPOOL W/ FLANGE	12"	FLG
21.	TEE	12"	FLG
22.	REDUCER – DIP	12" X 10"	FLG
23.	REDUCER – DIP	12" X 8"	FLG
24.	PUMP CONTROL VALVE	10"	FLG
25.	90° BASE BEND	10"	FLG
26.	GATE VALVE	10"	FLG
27.	SPOOL	8"	FLG
28.	DISMANTLING JOINT (W/ TIE RODS)	8"	FLG
29.	90° BASE BEND	8"	FLG
30.	SURGE ANTICIPATOR VALVE	8	FLG
31.	GATE VALVE	8"	FLG
32.	GATE VALVE	4"	THD
33.	COMBINATION AIR / VACUUM VALVE (APCO 149C)	4"	THD
34.	COMPANION FLANGE	4"	FLG X THD
35.	PIPE – PVC SCH 80 W/ #14 MESH 315 S.S. SCREEN	4"	THD
36.	TAPPING SADDLE	2"	THD
37.	BALL VALVE (BRASS)	2"	THD
38.	PIPE (BRASS)	2"	THD
39.	90° BEND (BRASS)	2"	THD
40.	DIELECTRIC UNION (BRASS)	2"	THD
41.	PIPE – PVC SCH 80 W/ #14 MESH 315 S.S. SCREEN	2"	SW
42.	TEE (BRASS)	2" X 1/2"	THD
43.	CROSS (BRASS)	2" X 1/2"	THD
44.	COMBINATION AIR / VACUUM VALVE (APCO 145C)	2"	THD
45.	HOSE BIBB (BRASS)	1/2"	THD
46.	PIPE (BRASS)	1/2"	THD
47.	BALL VALVE (BRASS)	1/2"	THD
48.	TEE (BRASS)	1/2"	THD
49.	SAMPLING TAP – SMOOTH NOSE SPIGOT	1/2"	THD
50.	4 1/2" LIGUID FILLED PRESSURE GUAGE 0-150 PSI	1/2"	THD
51.	PRESSURE TRANSMITTER (ROSEMONT 3051)	1/2"	THD
52.	ROSSUM SAND FILTER	1/2"	THD

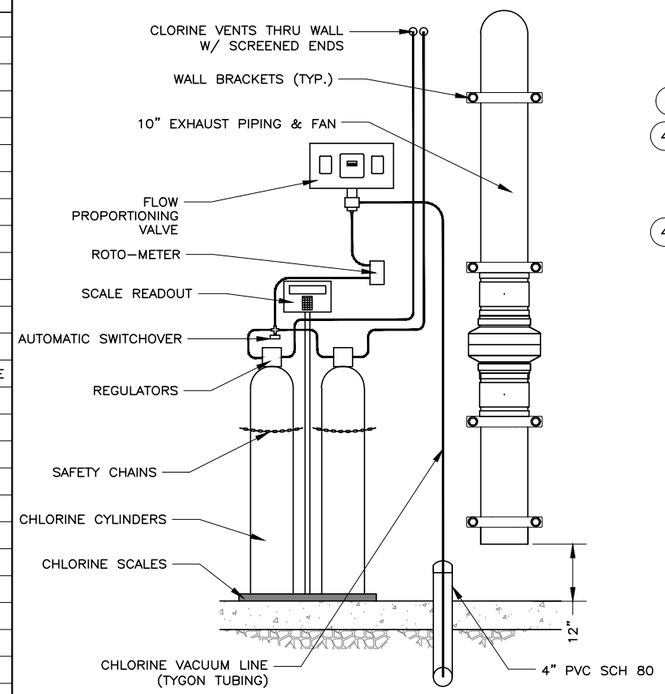

INJECTION DETAIL K C-2
N.T.S.

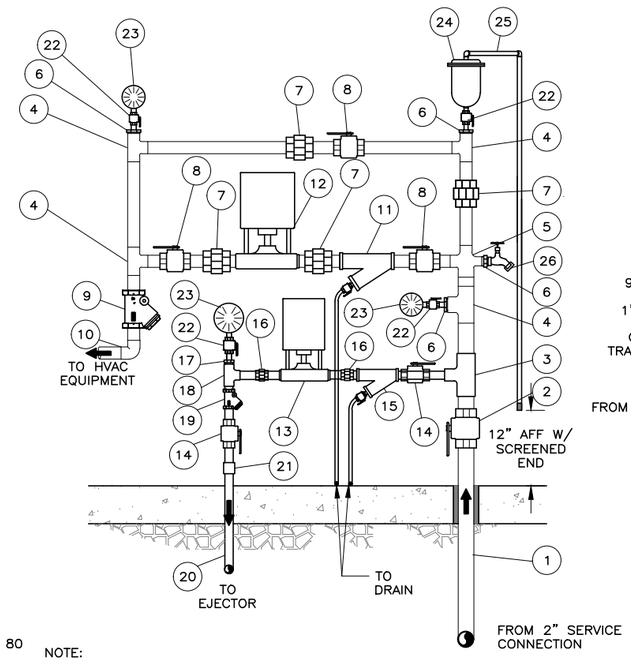

NOTE:
PIPING TO BE SCH 40 BRASS UNLESS OTHERWISE NOTED.

INJECTION DETAIL L C-2
N.T.S.

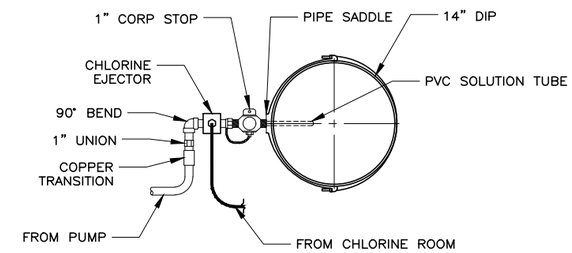

EJECTOR DETAIL M C-2
N.T.S.

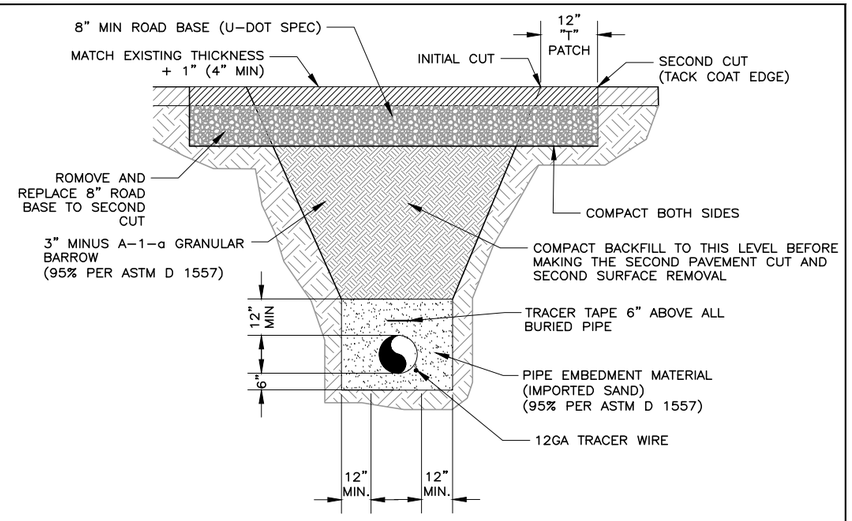

TYPICAL PRESSURE PIPE SECTION
N.T.S.

NOTE:
ALL DUCTILE IRON PIPE INSIDE OF / UNDER BUILDING, SHALL BE CLASS 53.

CHLORINE INJECTION FITTING SCHEDULE

NO.	DESCRIPTION	SIZE	JOINT
1.	COPPER PIPE (TYPE K)	2"	SLDR
2.	BALL VALVE (BRONZE)	2"	THD X SLDR
3.	TEE	2" X 1"	THD
4.	TEE	2"	THD
5.	CROSS	2"	THD
6.	HEX REDUCER	2" X 1/2"	THD
7.	UNION	2"	THD
8.	BALL VALVE (BRONZE)	2"	THD
9.	CHECK VALVE	2"	THD
10.	90° BEND	2"	THD
11.	Y-STRAINER (BRONZE W/ BLOW DOWN VALVE)	2"	THD
12.	HVAC CIRCULATION PUMP	2"	THD
13.	CHLORINE BOOSTER PUMP	1"	THD
14.	BALL VALVE (BRONZE)	1"	THD
15.	Y-STRAINER (BRONZE W/ BLOW DOWN VALVE)	1"	THD
16.	UNION	1"	THD
17.	HEX ADAPTER	1" X 1/2"	THD
18.	TEE	1"	THD
19.	CHECK VALVE	1"	THD
20.	COPPER PIPE (TYPE K)	1"	SLDR
21.	MALE ADAPTER	1"	THD X SLDR
22.	BALL VALVE (BRONZE)	1/2"	THD
23.	PRESSURE GAUGE (0-200 PSI W/ 4 1/2" FACE)	1/2"	THD
24.	AIR VAC	1/2"	THD
25.	PIPE AND FITTINGS (PVC SCH 80)	1/2"	THD
26.	HOSE BIBB (BRONZE)	1/2"	THD

PROFESSIONAL ENGINEER NO. 188802-2202 VERN G. CONDER 1-30-19 STATE OF UTAH

HANSEN ALLEN & LUCE inc ENGINEERS

PROJECT ENGINEER

DESIGNED VGC
DRAFTED BKC
CHECKED MEA
DATE JANUARY 2019

NO.	DATE	REVISIONS	BY	APVD.
3				
2				
1				

SCALE N.T.S.

springville PUBLIC WORKS
110 S. MAIN ST
SPRINGVILLE, UTAH
84663

400 SOUTH WELL-NO. 2 WELL HOUSE
CIVIL
FITTING SCHEDULE & CHLORINATION DETAILS

SHEET NO. C-6
260-44-200

FILE NAME: PROJECTS\260 – SPRINGVILLE CITY\44.200 400 S WELL NO. 2 PUMP HOUSE\CAD\WORKING\C-6 FITTING SCHEDULE & CHLORINATION DETAILS.DWG
FILE DATE: 1.30.2019 12:17:55 (CAH)

6/01

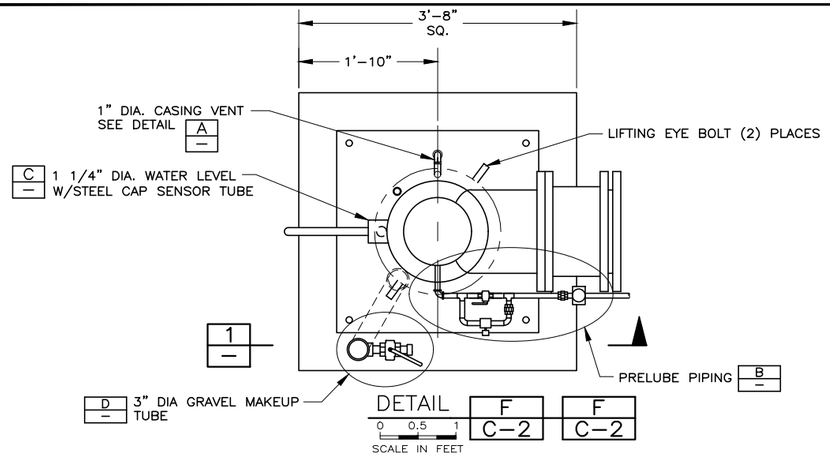

DETAIL F C-2 | F C-2

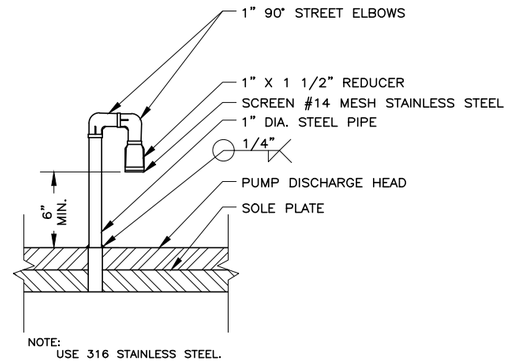

DETAIL A
N.T.S.

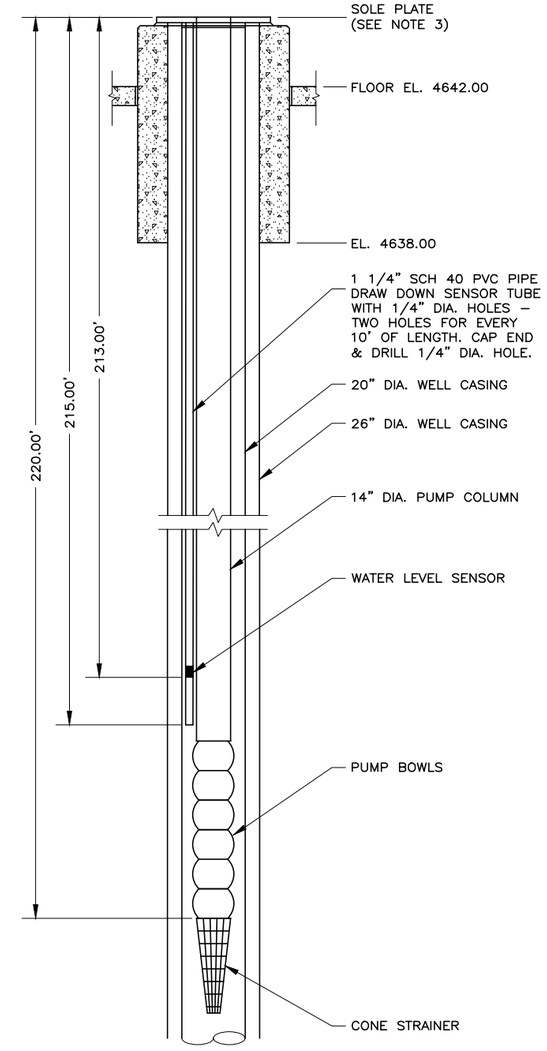

WELL PUMP DETAIL
N.T.S.

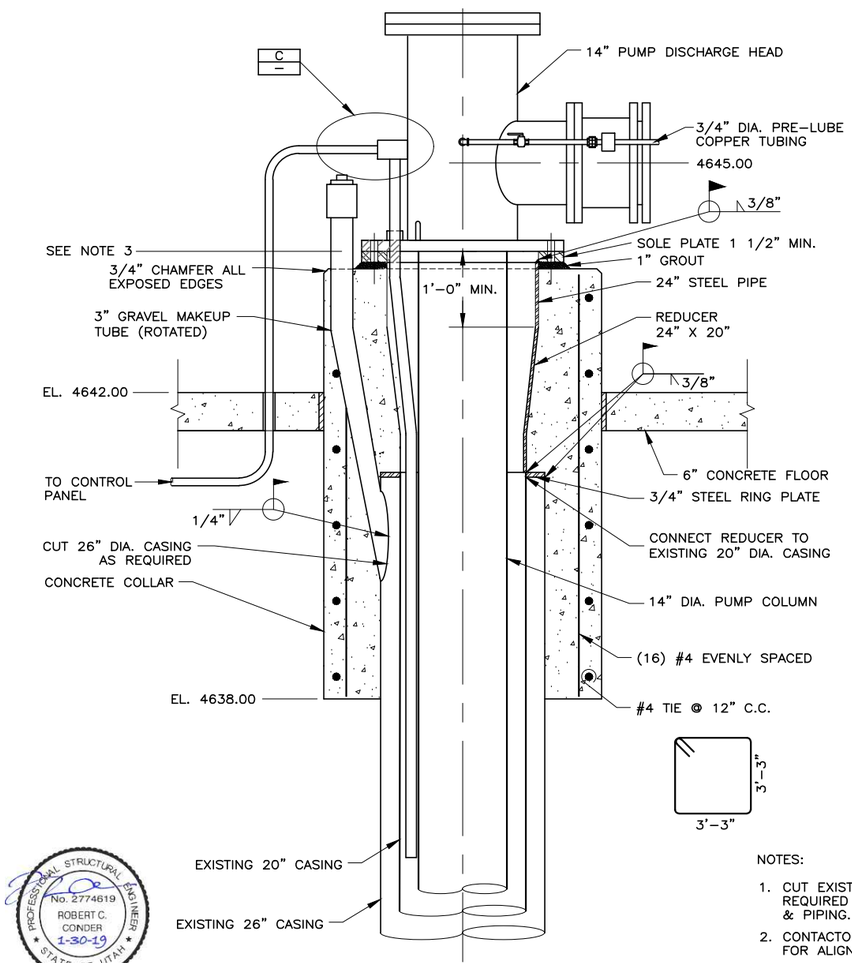

SECTION 1

NOTES:

1. CUT EXISTING CASINGS AS REQUIRED TO INSTALL NEW CASING & PIPING.
2. CONTACTOR TO SHIM PUMP BASE FOR ALIGNMENT.
3. ELEVATION OF TOP OF SOLE PLATE TO BE SET BASED ON PROVIDED PUMP DISCHARGE HEAD DIMENSIONS.

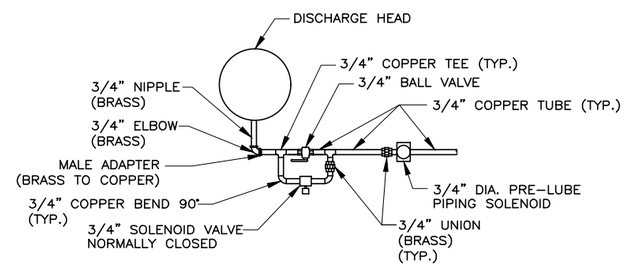

DETAIL B
N.T.S.

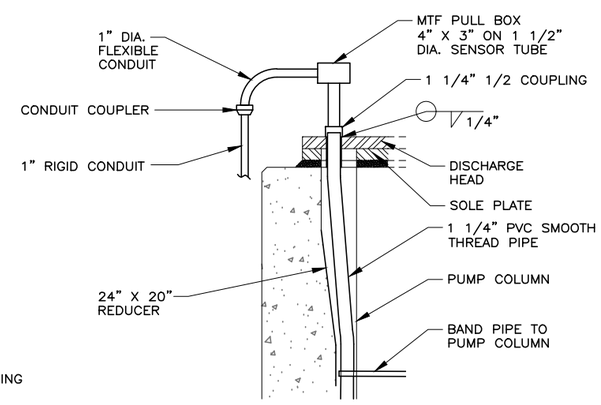

DETAIL C
N.T.S.

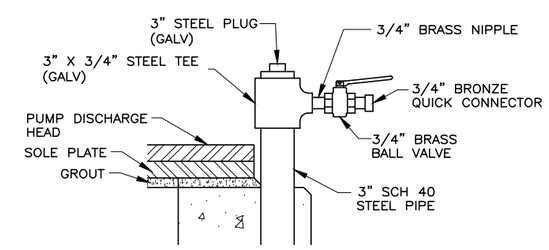

GRAVEL MAKEUP TUBE DETAIL D
N.T.S.

PROFESSIONAL STRUCTURAL ENGINEER No. 2774619 ROBERT C. CONDER 1-30-19 STATE OF UTAH

PROFESSIONAL ENGINEER No. 186662-2202 VERN G. CONDER 1-30-19 STATE OF UTAH

FILE NAME: PROJECTS\260 – SPRINGVILLE CITY\44.200 400 S WELL NO. 2 PUMP HOUSE\CAD\WORKING\C-7 PUMP BASE DETAILS.DWG
FILE DATE: 1.30.2019 16:23:05 (CAH)

HANSEN ALLEN & LUCE inc. ENGINEERS

PROJECT ENGINEER

DESIGNED	VGC	RCC
DRAFTED	BKC	
CHECKED	MEA	RCC
DATE	JANUARY 2019	

NO.	DATE	REVISIONS	BY	APVD.
3				
2				
1				

SCALE: AS SHOWN

springville PUBLIC WORKS
110 S. MAIN ST
SPRINGVILLE, UTAH
84663

400 SOUTH WELL–NO. 2 WELL HOUSE
CIVIL
PUMP BASE & PUMP SETTING DETAILS

SHEET NO. C–7
260–44–200

6/01

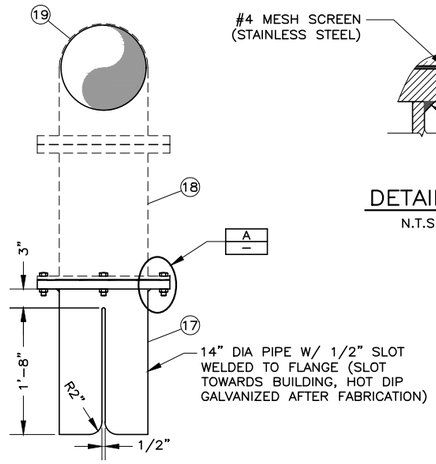

OUTLET DISCHARGE G / C-3
N.T.S.

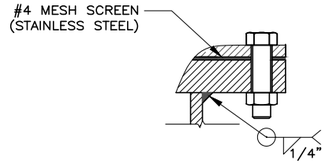

DETAIL A
N.T.S.

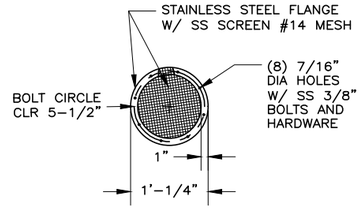

DETAIL B

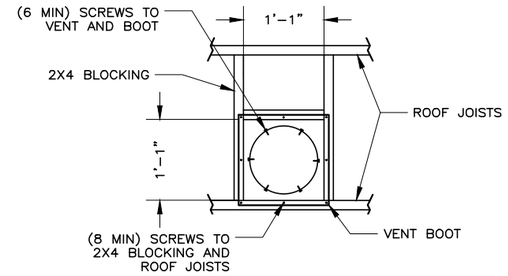

DETAIL C

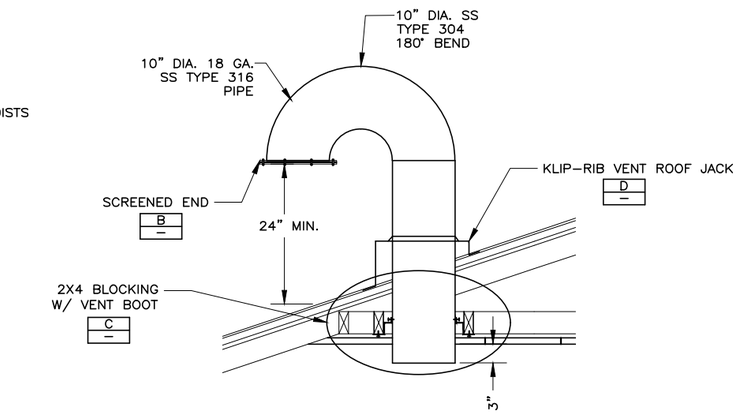

NOTES:
1. VENT PIPING TO BE 18 GA STAINLESS STEEL.
2. PAINT EXTERIOR VENT PIPE.

ROOF VENT DETAIL C / A-1

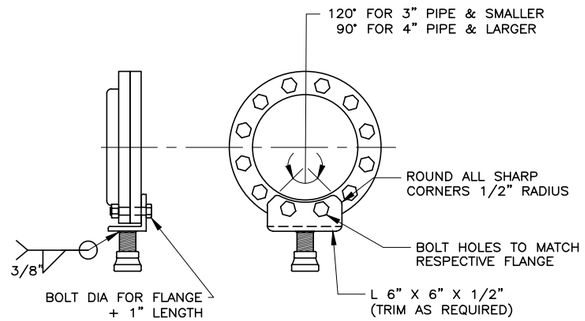

FLANGE SUPPORT E
N.T.S.

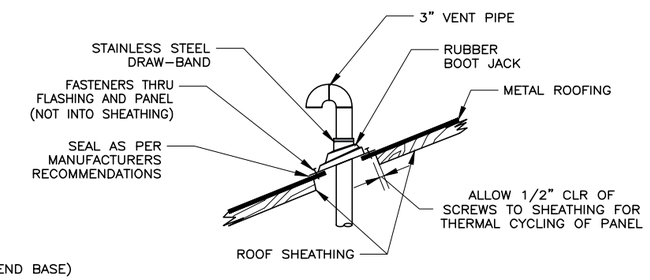

NOTE:
INSTALL PIPE BETWEEN STANDING SEAMS.

DETAIL D

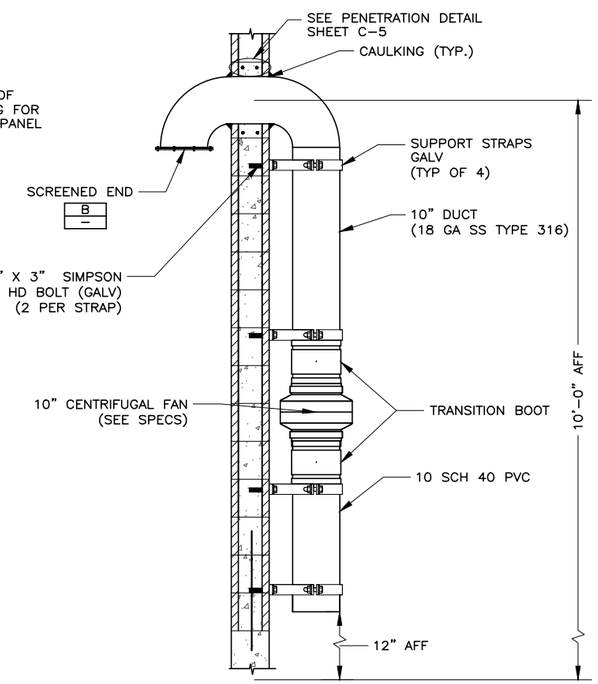

VENT FAN DETAIL K / A-1
N.T.S.

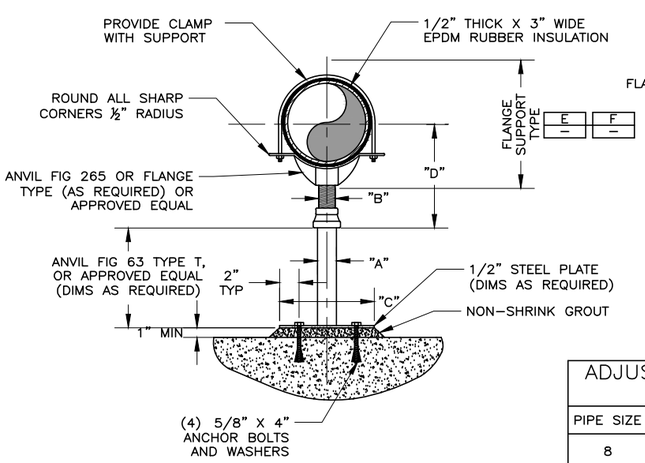

NOTE:
PIPE SADDLES, STRAPS AND ADJUSTERS SHALL BE "ANVIL INTERNATIONAL" OR APPROVED EQUAL.

PIPE SUPPORT H / C-3
N.T.S.

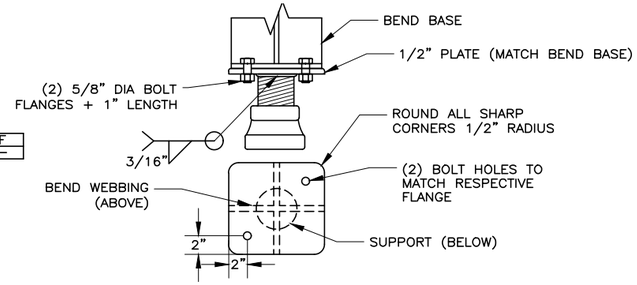

FLANGE SUPPORT F
N.T.S.

ADJUSTABLE PIPE SUPPORT SCHEDULE IN INCHES					
PIPE SIZE	"A"	"B"	"C"	"D" MIN	"D" MAX
8	3	2 1/2	9	11 1/2	16 1/2
10	3	2 1/2	9	13 1/2	18 1/2
12	3	2 1/2	9	15	19 1/2
14	4	3	11	16 1/2	20 1/2
16	4	3	11	17 1/2	22 1/2

NOTE:
ALL PIPE SUPPORTS SHALL BE HOT DIPPED GALVANIZED AFTER MANUFACTURE.

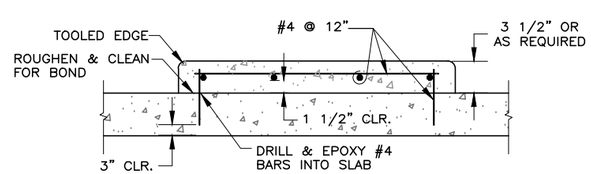

HOUSE KEEPING PAD J / C-2
N.T.S.

FILE NAME: PROJECTS\260 - SPRINGVILLE CITY\44.200 400 S WELL NO. 2 PUMP HOUSE\CAD\WORKING\C-8 MISCELLANEOUS DETAILS.DWG
FILE DATE: 1.30.2019 12:19:36 (CAH)

HANSEN ALLEN & LUCE INC. ENGINEERS

PROFESSIONAL ENGINEER No. 386669-2202 VERN G. CONDER 1-30-19 STATE OF UTAH
PROJECT ENGINEER

DESIGNED VGC	3			
DRAFTED BKC	2			
CHECKED MEA	1			
DATE JANUARY 2019	NO.	DATE	REVISIONS	BY / APVD.

SCALE N.T.S.

springville PUBLIC WORKS
110 S. MAIN ST
SPRINGVILLE, UTAH
84663

400 SOUTH WELL-NO. 2 WELL HOUSE
CIVIL
MISCELLANEOUS DETAILS

SHEET NO. C-8
260-44-200

6/01

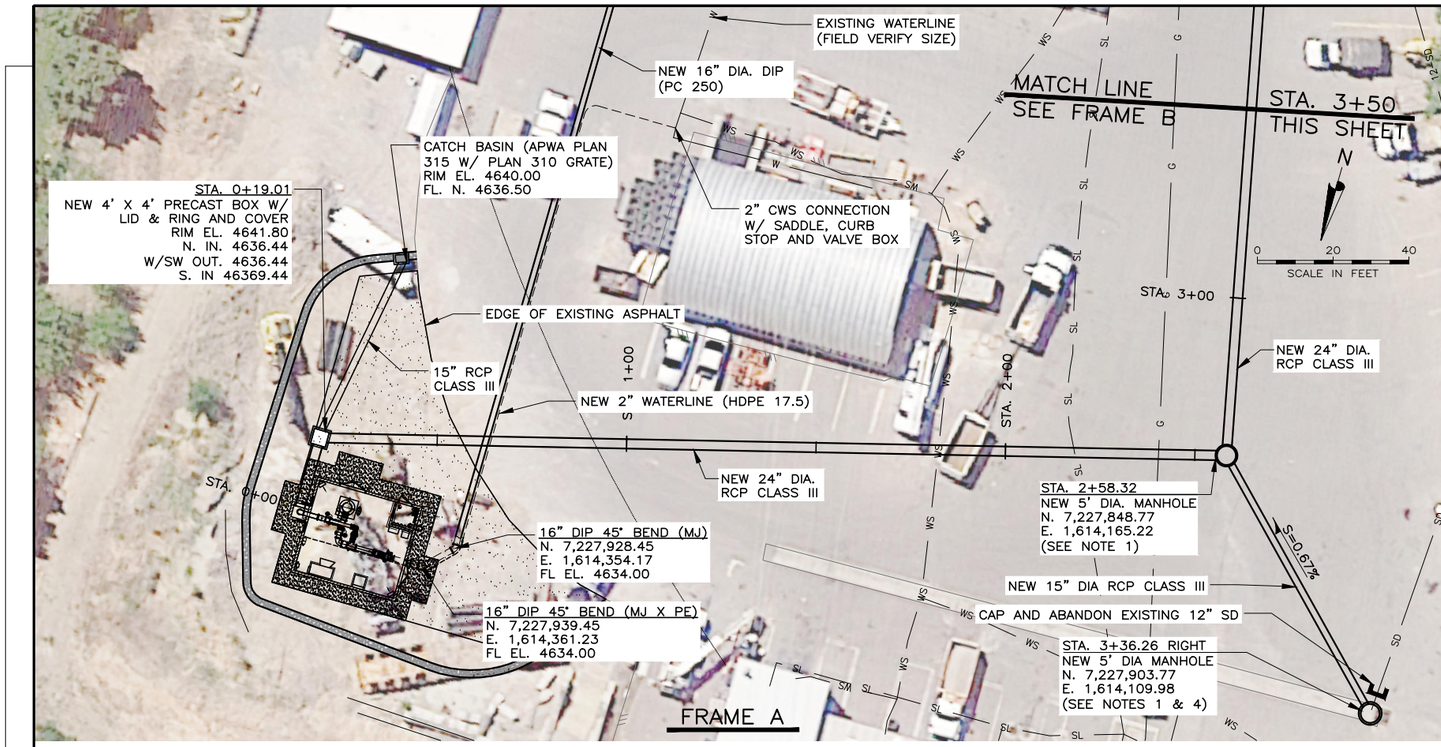

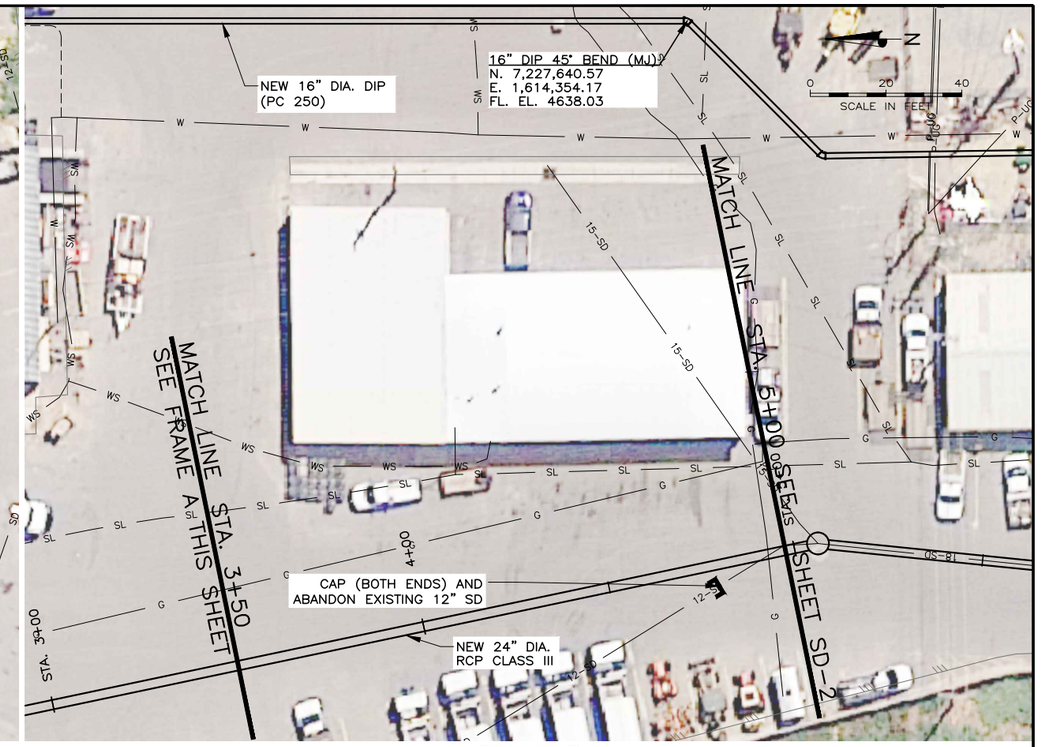

NOTES:

1. MANHOLES SHALL COMPLY WITH SPRINGVILLE CITY STANDARD DRAWING: SD-01 "STORM DRAIN MANHOLE".
2. JUNCTION BOX SHALL MEET DESIGN AS ILLUSTRATED BY SPRINGVILLE CITY STANDARD DRAWING: SD-05 "STORM DRAIN COMBO BOX WITHOUT CURB INLET". RECONNECT EXISTING 12" PIPE.
3. SITE IS AN ACTIVE PUBLIC WORKS SITE. WATERLINES MUST BE STAGED TO MAINTAIN ACCESS AROUND THE SITE FOR OWNER.
4. INSTALL NEW 5'-0" DIA MH IN PLACE OF THE EXISTING CATCH BASIN. SET GRATE TO MATCH EXISTING GRADE. RESTORE CONCRETE APRON. ABANDON EXISTING 12" SD TO SOUTH. (CAP BOTH ENDS)

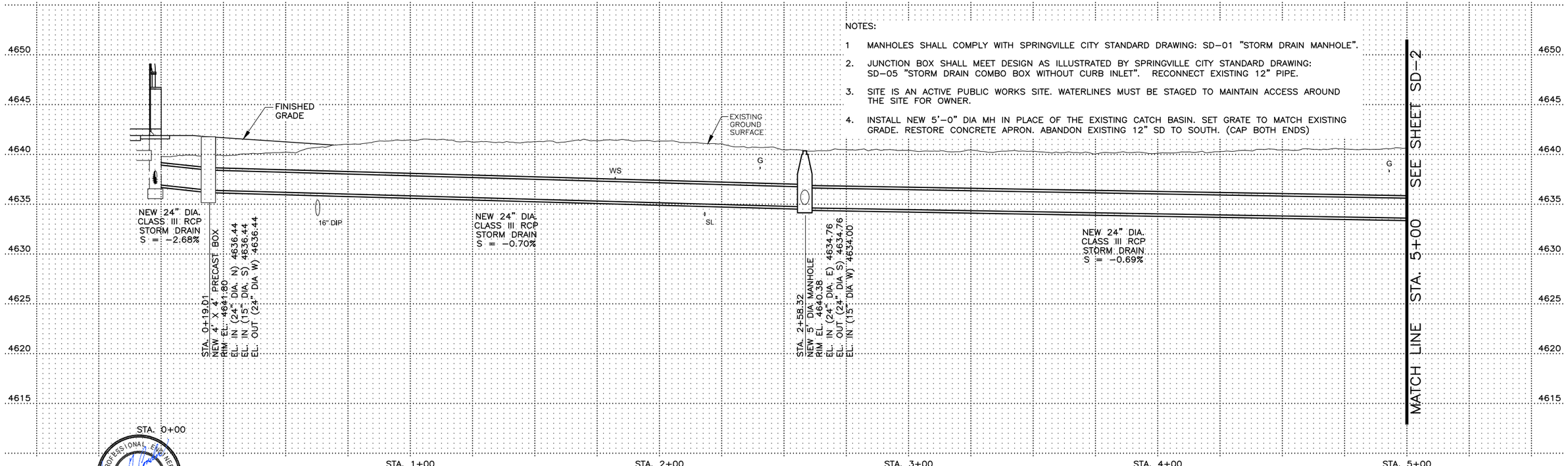

FILE NAME: PROJECTS\260 - SPRINGVILLE CITY\44.200 400 S WELL NO. 2 PUMP HOUSE\CAD\WORKING\SD-1.DWG
FILE DATE: 2.5.2019 12:33:02 (BKC)

HANSEN ALLEN & LUCE ENGINEERS

PROFESSIONAL ENGINEER No. 386862-2202 VERN G. CONDER 1-30-19 STATE OF UTAH

PROJECT ENGINEER

DESIGNED VGC	3			
DRAFTED	2			
CHECKED MEA	1			
DATE JANUARY 2019	NO.	DATE	REVISIONS	BY / APVD.

SCALE: AS SHOWN

springville PUBLIC WORKS

50 SOUTH MAIN
SPRINGVILLE, UTAH
84663

400 SOUTH WELL-NO. 2 WELL HOUSE
PLAN & PROFILE
PUMP-TO-WASTE STA. 0+00 TO STA. 5+00

SHEET SD-1

260-44-200

7/04

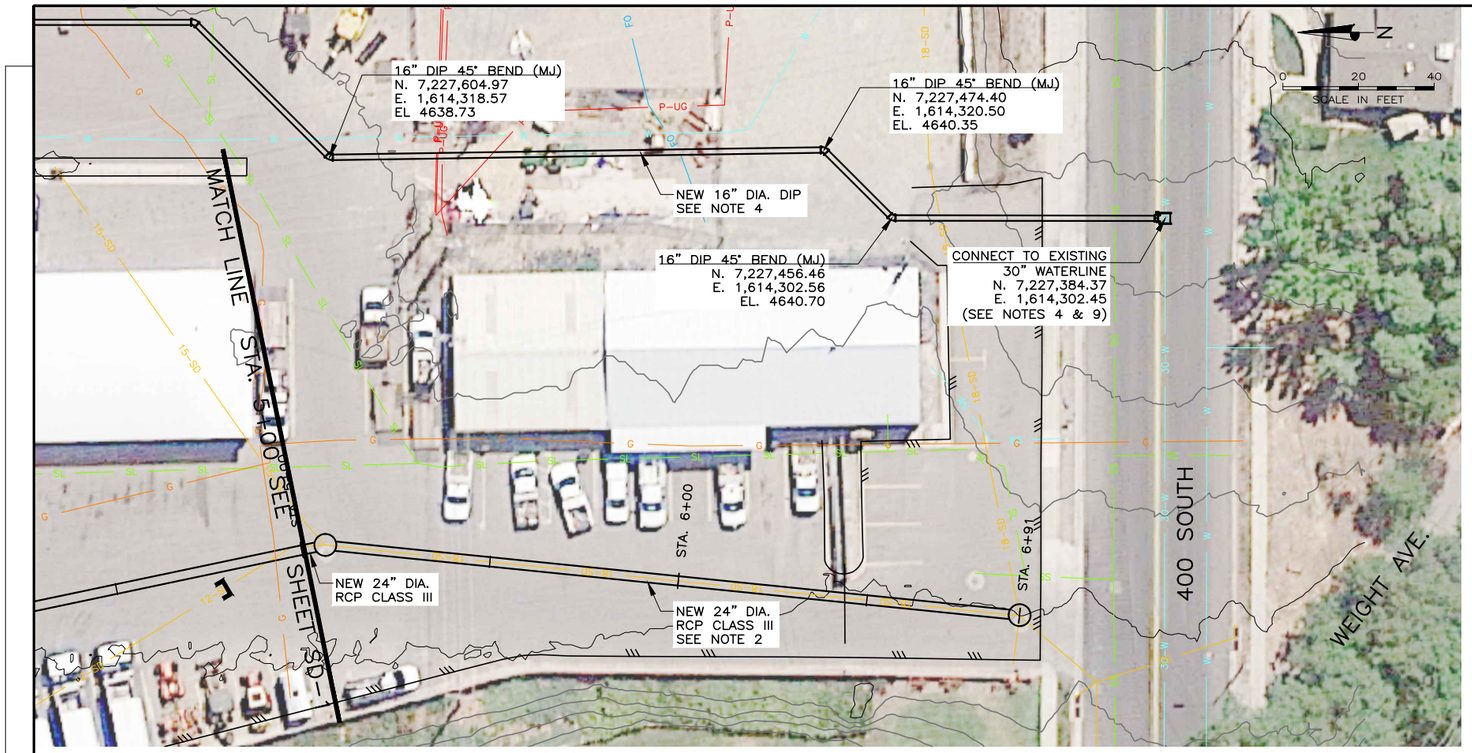

NOTES:

1. REMOVE EXISTING MANHOLE & REPLACE WITH NEW 5'-0" DIA. MANHOLE AS NOTED. RECONNECT EXISTING 15" PIPE.
2. REPLACE EXISTING 18" SD PIPELINE WITH NEW 24" (RCP CLASS III) PIPE. CONTRACTOR TO DISPOSE OF EXISTING PIPE.
3. REMOVE EXISTING MANHOLE & REPLACE WITH NEW 5,-0" DIA. MANHOLE AS NOTED. RECONNECT EXISTING 18" PIPE.

* 4. INSTALL NEW 16" DIP (PC 350), NEW BENDS, AND NEW 16" GATE VALVE (HOT TAP) W/ VALVE BOX AND COLLAR. VERIFY WATERLINE DEPTH. POTHOLE BEFORE PIPE INSTALLATION TO ALLOW FOR PIPE GRADE MODIFICATIONS. COORDINATE CONNECTION W/ CITY. PROVIDE A 4' MIN. COVER. MAINTAIN A POSITIVE SLOPE FROM THE WELL HOUSE TO THE CONNECTION.

5. RESTORE ALL DISTURBED SURFACE IMPROVEMENTS.
6. PROVIDE JOINT RESTRAINTS AND THRUST BLOCKS AT ALL WATERLINE BENDS & CONNECTIONS.
7. MANHOLE SHALL COMPLY WITH SPRINGVILLE CITY STANDARD DRAWING: SD-01 "STORM DRAIN MANHOLE".
8. CONTRACTOR TO FIELD VERIFY ELEVATIONS OF EXISTING STORM DRAIN PIPES PRIOR TO FABRICATION OF NEW MANHOLES.
9. RESTRAIN ALL JOINTS FOR 16" WATERLINE. MIN LENGTH 15 FEET EACH SIDE OF 45° BENDS. FOR CONNECTION TO 30" WATERLINE, MIN LENGTH IS 134 FEET.

* CONTRACTOR TO MAKE CONNECTION TO EXISTING 30" PIPELINE PRIOR TO MAY 1, 2019. OTHERWISE, CONTRACTOR WILL BE REQUIRED TO HOT TAP THE 30" PIPELINE AND INSTALL A 16" GATE VALVE.

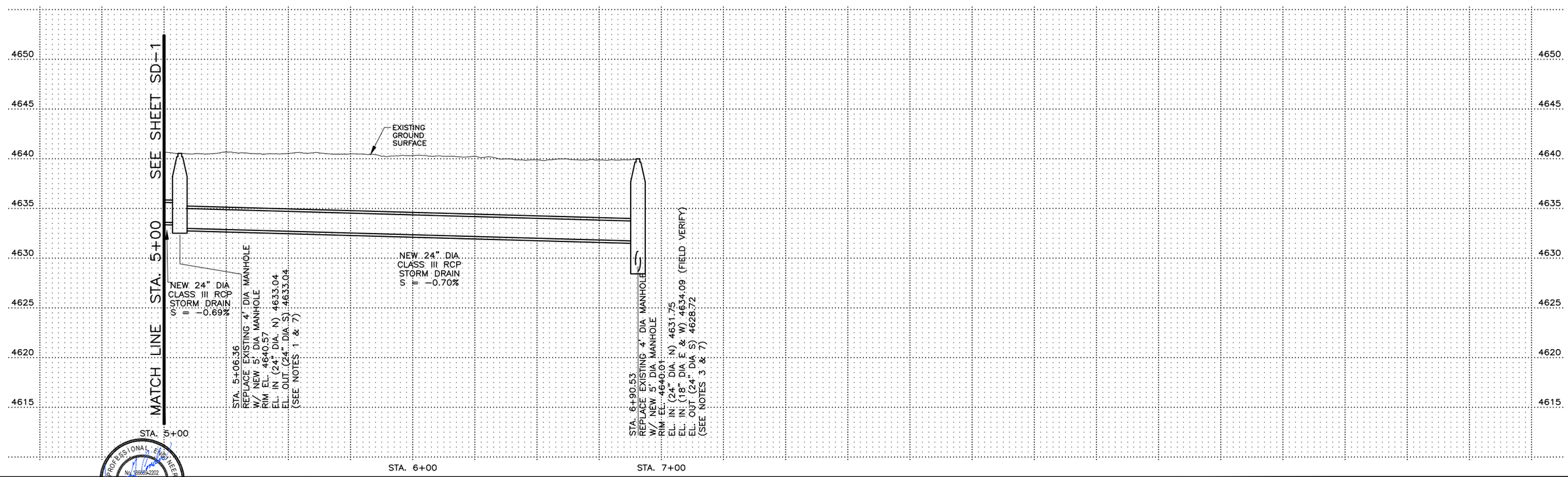

FILE NAME: PROJECTS\260 - SPRINGVILLE CITY\44.200 400 S WELL NO. 2 PUMP HOUSE\CAD\WORKING\SD-2.DWG
FILE DATE: 2.5.2019 12:30:18 (BKC)

HANSEN ALLEN & LUCE INC. ENGINEERS

PROFESSIONAL ENGINEER No. 386862202 VERN G. CONDER 1-30-19 STATE OF UTAH

PROJECT ENGINEER

DESIGNED VGC	3			
DRAFTED	2			
CHECKED MEA	1			
DATE JANUARY 2019	NO.	DATE	REVISIONS	BY / APVD.

SCALE: AS SHOWN

springville PUBLIC WORKS
50 SOUTH MAIN
SPRINGVILLE, UTAH
84663

400 SOUTH WELL-NO. 2 WELL HOUSE
PLAN & PROFILE
PUMP-TO-WASTE STA. 5+00 TO STA. 6+91

SHEET SD-2
260-44-200

7/04

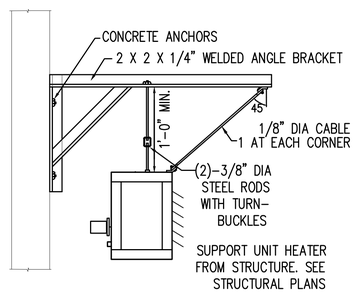

ELECTRIC HEATER DETAIL
NO SCALE
2 / H-1

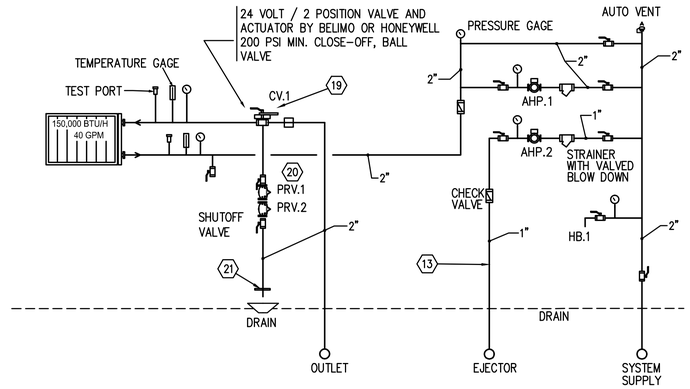

PIPING DETAIL – COORDINATE WITH DETAIL L/C11
NO SCALE
3 / H-1

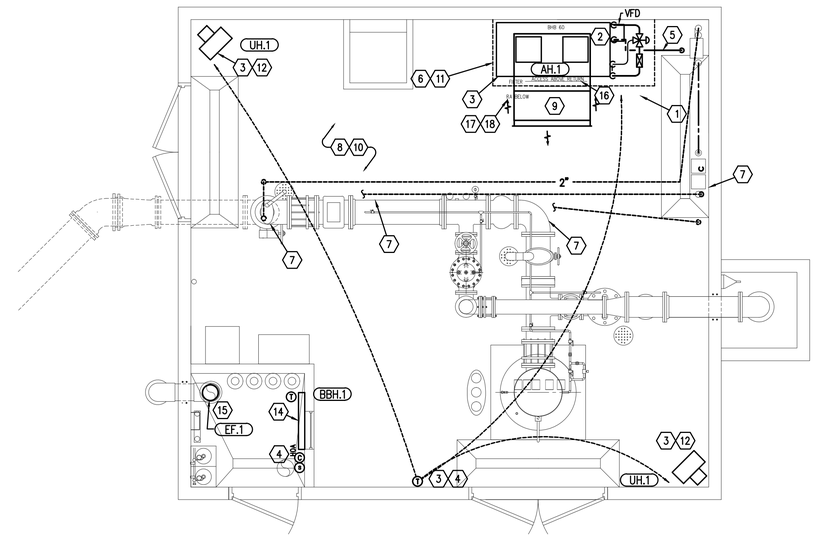

1 / H-1 HVAC PLAN
SCALE: 1/4" = 1'-0"

PUMP SCHEDULE

ID	MANUFACTURER AND MODEL NUMBER	LOCATION	TYPE	FLUID: FLOW RATE (GPM)	FLUID: WORKING FLUID	FLUID: HEAD LOSS (FT)	PUMP: EFF. (%)	ELECTRICAL: MOTOR SIZE (HP)	ELECTRICAL: MOTOR BHP (HP)	ELECTRICAL: MOTOR SPEED (RPM)	ELECTRICAL: VOLT/PH/HZ	NOTES
AHP.1	B&G E60 1.5X1.5X6.25	PUMP ROOM	CIRCULATOR	40	WATER	34	-	1.5	1	1750	480 / 3 / 60	1,2,3
AHP.2	GRUNDFOS CR1-1-6	PUMP ROOM	BASE MOUNTED	5	WATER	116	-	0.75	-	3600	480 / 3 / 60	1,2,3

1. CONSTANT VOLUME PUMP.
2. LEAD FREE FOR USE WITH POTABLE WATER.
3. COORDINATE WITH CIVIL SHEETS.

FAN SCHEDULE

ID	MANUFACTURER AND MODEL NUMBER	LOCATION	TYPE	AIR TYPE	AIR: AIRFLOW RATE (CFM)	AIR: TOTAL STATIC PRESSURE (IN. WATER)	ELECTRICAL: MOTOR SIZE WATTS	ELECTRICAL: VOLT/PH/HZ	PHYSICAL: LENGTH/ WIDTH/ HEIGHT - WEIGHT (IN) - LBS	NOTES
EF.1	FANTECH PRIOAIR10-EC	CHLORINE AREA	INLINE-PLASTIC	CORROSIVE	432	0.75	164	120/1/60	13/13/10	1, 2, 3

1. FAN OPERATION TO BE TIED TO SWITCH / TIMER SENSOR.
2. COORDINATE SEQUENCING OF FAN OPERATION WITH ELECTRICAL.
3. FAN TO BE CORROSION RESISTANT.

ELECTRIC HEATER SCHEDULE

ID	MANUFACTURER AND MODEL NUMBER	LOCATION	TYPE	USE TYPE	AIR: AIRFLOW RATE (CFM)	AIR: LOAD (BTU/H)	ELECTRICAL: MOTOR SIZE (HP)	ELECTRICAL: MOTOR SPEED (RPM)	ELECTRICAL: HEAT CAPACITY (KW)	ELECTRICAL: VOLT/PH/HZ	PHYSICAL: LENGTH/ HEIGHT/ WIDTH (INCH)	NOTES
UH.1	Q-MARK MUH 0541 5KW	PUMP ROOM	UNIT HEATER	HEATING	350	17,050	1/10	1750	5	480 / 3 / 60	14 / 16 / 8	1,2,3
BBH.1	Q-MARK CBD2008 2KW	CHORLINE	BASEBOARD	HEATING	-	6,826	-.-	-.-	2	208 / 1 / 60	46 / 9 / 3	3

1. PROVIDE WITH FACTORY WALL MOUNT BRACKET.
2. PROVIDE WITH FINGER PROOF FAN GUARD.
3. COORDINATE WITH OWNER.

AIR HANDLER SCHEDULE

ID	MANUFACTURER AND MODEL NUMBER	LOCATION	TYPE	USE TYPE	AIR: AIRFLOW RATE (CFM)	AIR: LOAD (BTU/H)	AIR: ENTERING TEMP. DB/WB (°F)	AIR: LEAVING TEMP. DB/WB (°F)	FAN: EXTERNAL STATIC PRESSURE (IN. WATER)	FLUID: FLOW RATE (GPM)	FLUID: ENTERING/ LEAVING TEMP. (°F)	FLUID: WORKING FLUID	FLUID: HEAD LOSS (FT)	ELECTRICAL: MOTOR SIZE (HP)	ELECTRICAL: VOLT/PH/HZ	PHYSICAL: LENGTH/ WIDTH/ HEIGHT (IN) (LBS)	NOTES
AH.1	MAGICAIRE BMB 60	PUMP ROOM	VERTICAL	HTG	-	-		-	-	-	-	-	-	5	480 / 3 / 60	72 / 34 / 82 550	1,2,3,4
				CLG	6,000	150,000	80 / 62.6	61 / 56	0.4	38	60 / 68	WATER	10				

1. PROVIDE WITH DISCONNECT.
2. PROVIDE WITH FACTORY MOUNTED SMOKE DETECTOR.
3. VERTICAL FLOOR MOUNT UNIT.
4. PROVIDE WITH 6 ROW COIL, 2" CONNECTION.

MECHANICAL KEYED NOTES

1. RUN WATER PIPE UP TO UNIT FROM WALL CONNECTIONS.
2. SEISMIC SUPPORT AIR HANDLER FROM WALL AND INSTALL ON VIBRATION ISOLATORS. INSTALL SEISMIC CABLE AT 45 DEGREE ANGLES FROM EACH CORNER.
3. INTERLOCK AH.1 AND BOTH UNIT HEATERS TO THERMOSTAT AND CONTROLLER. PROGRAM CONTROLLER TO OPERATE EQUIPMENT AS PER SEQUENCE IN COMMISSIONING CHECKLIST.
4. HONEYWELL T775 CONTROL SYSTEM IN RATED CONTROL ENCLOSURE.
5. PIPE CONDENSATE FROM COOLING COIL PAN TO PIPING.
6. INSTALL WITH PROPER MAINTENANCE ACCESS AS PER MANUFACTURER. INSTALL ON FACTORY SKID.
7. COORDINATE WATER CONNECTIONS WITH OWNER.
8. NO LEAD BRAZING ON ANY PIPING.
9. INSTALL A 24" SUPPLY DUCT TRANSITION FROM UNIT DISCHARGE TO OUTLET.
10. DIELECTRIC UNIONS. TYPICAL.
11. 4" HOUSEKEEPING PAD.
12. PROVIDE WITH FACTORY WALL MOUNTING BRACKETS. TYPICAL.
13. PIPE TO EJECTOR. TYPICAL.
14. BASEBOARD HEATER TO BE LOCATED UNDER WINDOW. COORDINATE WITH OWNER.
15. INSTALL VERTICALLY INLINE. FAN TO OPERATE ON SWITCH WITH TIMER. COORDINATE WITH ELECTRICAL.
16. ACCESS DOORS TO AIR HANDLER FROM THIS SIDE. COORDINATE WITH ELECTRICAL AND ARCHITECTURAL.
17. PROVIDE GUARD FOR INLET AND ANGLE STEEL SUPPORT.
18. LOW SIDE RETURN THROUGH WALL. 48X24 SIDEWALL INDUSTRIAL SUPPLY GRILLE; TUTTLE AND BAILEY T155, OR EQUAL. COLOR TO BE WHITE. SUBMITTAL REQUIRED.
19. BELIMO B238+ARB24-3 CONTROL VALVE OR EQUIVALENT
20. PRV – 60PSI AFTER TEE.
21. ORIFICE PLATE. TO LIMIT TO 40 GPM. COORDINATE WITH CIVIL SHEETS.

COMMISSIONING CHECKLIST

THE FOLLOWING CHECKLIST IS TO BE COMPLETED BY THE CONTRACTOR AND RETURNED TO THE ENGINEER AT JOB COMPLETION WITH AS-BUILT RED LINES.

[INITIAL- DATE] ITEM

GENERAL
[-] THE DESIGN INTENT, NOTES, DETAILS, AND CHECKLISTS ARE UNDERSTOOD.

START-UP
[-] ALL START-UP CHECK LISTS ARE COMPLETE AND PREPARED TO SUBMIT TO THE OWNER.

SEQUENCE
[-] THE SEQUENCE HAS BEEN VERIFIED TO OPERATE CORRECTLY:

PUMP ROOM SEQUENCE
COOLING: MAINTAIN 80 DEG. MAX WITH 5 DEGREE DEAD-BAND.

WHEN THE PUMP MOTORS ARE RUNNING:
AH.1 – ON/AUTO
UH.1 – OFF

WHEN THE PUMP MOTORS ARE OFF (MANUAL OPERATION ONLY):
AH.1 – ON/AUTO
UH.1 – OFF

HEATING: MAINTAIN 55 DEGREES WITH 5 DEGREE DEAD-BAND.
AH.1 – OFF
UH.1 – ON/AUTO

THESE DOCUMENTS ARE INCOMPLETE WITHOUT FULL COORDINATION WITH BLUEFIELD ENGINEERING.

LICENSED PROFESSIONAL ENGINEER No. 260219 E. TAYLOR GROBERG 01/30/19 STATE OF UTAH

HANSEN ALLEN & LUCE inc ENGINEERS

bluefield engineering.com

DESIGNED TG	3				
DRAFTED BLUEFIELD	2				
CHECKED BLUEFIELD	1	–	–	TG	
DATE JANUARY 2019	NO.	DATE	REVISIONS	BY	APVD.

SCALE: AS SHOWN

springville PUBLIC WORKS
110 S. MAIN ST
SPRINGVILLE, UTAH
84663

400 SOUTH WELL–NO.2 WELL HOUSE
HVAC
HVAC DESIGN

SHEET H–1
260–44–200

DIVISION 15 – MECHANICAL

SECTION 15100
MECHANICAL REQUIREMENTS

GENERAL CONDITIONS:

The General Conditions of the Contract, with the amendments, supplements, forms and requirements in Division 1, and herewith made a part of this Division.

All sections of Division 15 shall comply with the Mechanical General Requirements. The standards established in this section as to quality of materials and equipment, the type and quality of workmanship, mode of operations, safety rules, code requirements, etc., shall apply to all sections of this Division as though they were repeated in each Division.

SCOPE OF WORK:

The project described herein is the Springville 400 South Well #2 Project. This work shall include all labor, materials, equipment, fixtures, and devices for the entire mechanical work and a complete operating and tested installation as required for this project.

Section 15 Index:

Section 15055 – COMMON PIPING REQUIREMENTS
Section 15080 – MECHANICAL INSULATION
Section 15110 – VALVES
Section 15140 – WATER PIPING
Section 15680 – MODULAR AIR HANDLERS
Section 15815 – METAL DUCTS
Section 15820 – AIR DUCT ACCESSORIES
Section 15830 – HVAC POWER VENTILATORS
Section 15870 – DIFFUSERS, REGISTERS AND GRILLES
Section 15900 – TEMPERATURE CONTROLS
Section 15950 – TESTING, ADJUSTING, BALANCING AND MAINTENANCE MANUALS
Section 15990 – CONTROLS SEQUENCE

SYSTEM DESCRIPTION:

CODES & ORDINANCES:

All work shall be executed in accordance with all underwriters, public utilities, local and state rules and regulations applicable to the trade affected. Should any change in the plans and Specifications be required to comply with these regulations, the Contractor shall notify the Engineer before the time of submitting his bid. After entering into contract, the Contractor will be held to complete all work necessary to meet these requirements without extra expense to the Owner. Where work required by drawings or specifications is above the standard required, it shall be done as shown or specified.

Applicable codes are as follows:
2015 International Mechanical Code
2015 International Building Code
2015 International Plumbing Code
Utah State Boiler Code

SUBMITTALS AND SHOP DRAWINGS:

Submittals:

As soon as possible after the contract is awarded, but in no case more than 5 calendar days thereafter, the Contractor shall submit to the Engineer four (4) copies of the descriptive literature covering products and materials to be used in the installation of mechanical systems for this project. The review of the submitted data will require a minimum of [7] days. If the Contractors schedule requires return of submitted literature in less than the allotted time, the Contractor shall accelerate his submittal delivery date. The Contractor shall resubmit all items requiring re-review within 7 days of returned submittals. Refer to each specification section for items requiring submittal review. Written approval of the Owner's Representative shall be obtained before installing any such equipment or materials for the project. The submittals shall be prepared in an orderly manner, contained in a 3-ring loose-leaf binder with index and identification tabs each item or group of items and for each specification section. All items shall be submitted at one time except automatic temperature control drawings and seismic restraint drawings which may be submitted separately within 60 days of the contract award date. Partial submittals will not be reviewed until the complete submittal is received.

Submitted literature shall bear the Contractor's stamp, indicating that he has checked all equipment being submitted; that each item will fit into the available space with the accesses shown on the drawings; and, further, that each item conforms to the capacity and quality standards given in the contract documents.

Submitted literature shall clearly indicate performance, quality, and utility requirements; shall show dimension and size of connection points; and shall include derating factors that were applied for each item of equipment to provide capacity at job site elevation. Temperature control submittals shall include piping and wiring diagrams, sequence of operation and equipment. Equipment must fit into the available space with allowance for operation, maintenance, etc. Factory piped and wired equipment shall include shop drawings for all internal wiring and piping furnished with the unit.

Submitted literature shall clearly show all required field install wiring, piping, and accessory installations required by the Contractor to provide a complete operating system.

Review by the Owner's Representative is for general conformance of the submitted equipment to the project specification. In no way does such review relieve this Contractor of his obligation to furnish equipment and materials that comply in detail to the specification nor does it relieve the Contractor of his obligation to determine actual field dimensions and conditions that may affect his work. Regardless of any items overlooked by the submittal review, the requirements of the contract drawings and specifications must be followed and are not waived or superseded in any way by the review.

The contractor is to review equipment by description, catalog number, and manufacturer's names. Standards of quality have been established by the Engineer for certain manufactured equipment items and specialties that are to be furnished by this Division. Alternate products and equipment may be proposed for use only if specifically named in the specifications or if given written prior approval in published addenda. Design equipment is the equipment listed on the drawings or if not listed on the drawings is the equipment first named in the specifications.

Alternate Equipment:
The Contractor should protect himself with the supplier of alternate named equipment. Alternate named equipment will be reviewed only one time.

Should alternate equipment be submitted and be rejected, it shall not be resubmitted for review and it shall be the responsibility of this contractor. The contractor shall only submit on design equipment on future submittals. Incomplete submittal data will be rejected.

If the Engineer is required to do additional design work to incorporate changes caused by submitting equipment or products, different than the design equipment specified, as defined above, the contractor shall reimburse the engineer for additional time and expenses at the engineers current, recognized, hourly rates.

DRAWINGS AND MEASUREMENTS:

Drawings:

The contract document drawings show the general design, arrangements, and extent of the system. In certain cases, the drawings may include details that show more nearly exact locations and arrangements; however, the locations, as shown diagrammatically, are to be regarded as general.

It shall be the work of this Section to make such slight alterations as may be necessary to make adjustable parts fit to fixed parts, leaving all complete and in proper shape when done. All dimensions given on the drawings shall be verified as related to this work and with the Engineer's office before work is started.

This Section shall carefully study building sections, space, clearances, etc., and then provide offsets in piping or ductwork as required to accommodate the building structure without additional cost to the Owner. In any case and at any time, a change in location required by obstacles or the installation of other trades not shown on the mechanical plans shall be made without charge.

The drawings shall not be scaled for roughing in measurements nor shall they be used as shop drawings. Where drawings are required for these purposes or where drawings must be made from field measurements, the Contractor shall take the necessary measurements and prepare the drawings. Shop drawings of the various subcontractors shall be coordinated to eliminate all interferences and to provide sufficient space for the installation of all equipment, piping, ductwork, etc.

The drawings and specifications have been prepared to supplement each other and they shall be interpreted as an integral unit with items shown on one and not the other being furnished and installed as though shown and called out on both.

Record Drawings:

Record drawings for all systems and sections of this Division shall be furnished as work of this Section. Blue-line white prints of floor plans shall be furnished by the Engineer's office. These prints shall be accurately and neatly marked in colored pencil, showing all changes from schematics. Installation and commissioning checklists that are provided on the drawings are to be initialed and dated upon completion.

These drawings shall be reviewed with the Engineer's at least once each month, shall be submitted at time of final inspection, and shall be checked for accuracy. Failure to keep record drawings up-to-date shall be cause for withholding monthly payments.

CONTRACTOR'S USE OF BUILDING EQUIPMENT:

The Contractor may use equipment such as electric motors, fans, heat exchangers, filters, etc., with the written permission of the Owner. As each piece of equipment is used (such as electric motors and fans), maintenance procedures approved by the manufacturer are to be followed. A careful record is to be kept of the length of the time the equipment is used, maintenance procedures followed, and any difficulty encountered. The record is to be submitted to the Owner upon acceptance. All fan belts and filter media (such as bearings) shall be carefully inspected just prior to acceptance. Any excessive wear noted shall require replacement. Any damage by Contractor to be replaced by Contractor.

EXISTING CONDITIONS:

The Contractor shall carefully examine all existing conditions that might affect the mechanical system and shall compare these conditions with all drawings and specifications for work included under this contract. He shall, at such time, ascertain and check all conditions that may affect his work. No allowance shall subsequently be made in his behalf for an extra expense incurred as a result of his failure or neglect to make such examination. This Contractor shall include in his bid proposal all necessary allowances to repair or replace any item that will remain or will be removed, and any item that will be damaged or destroyed by new construction.

The Contractor shall remove all abandoned piping, etc., required by new construction and cap or plug openings. No capping, etc., shall be exposed in occupied areas. All openings of items removed shall be sealed to match adjacent surfaces.

The Contractor shall verify the exact location of all existing services, utilities, piping, etc., and make connections to existing systems as required or as shown on the drawings. The exact location of each utility line, together with size and elevation, shall be established before any on-site lines are installed. Should elevation or size of existing main utility lines make connections to them impossible as shown on drawings, then notification of such shall immediately be given to the Owners Representative for a decision.

EQUIPMENT CAPACITIES:

Capacities shown for equipment in the specifications and on the drawings are the minimum acceptable. No equipment shall be considered as an alternate without prior approval of the design Engineer.

All equipment shall give the specified capacity and performance at the job-site elevation of [4700] feet above sea level. Manufacturers' standard ratings shall be adjusted accordingly. All capacities and performances listed on drawings or in specifications are for job-site conditions.

SEISMIC REQUIREMENTS FOR EQUIPMENT:

All equipment must be furnished structurally adequate to withstand seismic forces as outlined in the Uniform Building Code for seismic Zone 3. Equipment bases shall be designed for direct attachment of seismic snubbers and/or seismic anchors.

COOPERATION WITH OTHER TRADES:

The general contractor shall be responsible for job site coordination. The Contractor shall refer to other drawings and parts of this specification that cover work of other trades that is carried on in conjunction with the mechanical work such that all work can proceed without interference resulting from lack of coordination.

The Contractor shall properly size and locate all openings, chases, sleeves, equipment bases, and accesses. He shall provide accurate wiring diagrams to the Electrical Contractor for all equipment furnished under this Division.

The ceiling cavity must be carefully reviewed and coordinated with all trades. In the event of conflict, the installation of the mechanical equipment and piping shall be in the following order: plumbing, waste, and soil lines; supply, return, and exhaust ductwork; water piping; medical gases; fire protection piping; and pneumatic control piping.

The mechanical Contractor shall insure that the installation of all piping, ducts and equipment is in compliance with Articles 110-16 and 384-4 of the National Electrical Code relative to proper clearances in front of and over all electrical panels and equipment. No piping or ductwork will be allowed to run over an electrical panel.

RESPONSIBILITY OF CONTRACTOR:

The Contractor is responsible for the installation of a satisfactory piece of work in accordance with the true intent of the drawings and specifications. He shall provide, as a part of his work and without expense, all incidental items required even though these items are not particularly specified or indicated. The installation shall be made so that its several component parts will function together as a workable system and shall be left with all equipment properly adjusted and in working order. (The Contractor shall familiarize the Owner's Representative with maintenance and lubrication instructions as prepared by the Contractor and shall explain and fully instruct him relative to operating, servicing, and maintenance of them.) Part of training package and P.M. program.

UNFIT OR DAMAGED WORK:

Any part of this installation that fails, is unfit, or becomes damaged during construction, shall be replaced or otherwise made good. The cost of such remedy shall be the responsibility of this Division and general contractor.

WORKMANSHIP:

Workmanship shall be the best quality of its kind for the respective industries, trades, crafts, and practices, and shall be acceptable in every respect to the Owner's representative. Nothing contained herein shall relieve the Contractor from making good and perfect work in all details in construction. All work shall be performed under the directories of any licensed journeyman. Contractor shall maintain a licensed journeyman on site at all times during construction.

SAFETY REGULATION:

The Contractor shall comply with all local and OSHA safety requirements in performance with this work. (See General Conditions). This Contractor shall be required to provide equipment, supervision, construction, procedures, and all other necessary items to assure safety to life and property.

ELECTRICAL SERVICES:

Motors:

All motors required under this Division shall be furnished and installed as work of this Division. All motor-starting equipment, unless otherwise specified in Division 15 shall be furnished as work of Division 16, Electrical. Motors shall be name plated with Class F insulation as manufactured by Lincoln Electric, US Motors, General Electric, Allis Chalmers, Century, or Reliance, designed for quiet continuous operations with maximum (Class B) 90oC resistance heating rise with 40oC ambient temperature at full load and rated speed and voltage individually specified with minimum 1.15 service factor. Motors shall be all of the same make except those incorporated in packaged units. All motors shall be provided with ball bearings and conduit connection boxes. Lifting eyes shall be provided on motors 1-1/2 horsepower and larger.

Unless otherwise specified, motors 3/4 horsepower and larger shall be 3 phase, 60 cycle, and motors 1/2 horsepower and smaller shall be single phase, 60 cycle. Contractor is to coordinate with available power voltage and phase. Refer to fan and equipment schedules on drawings for voltage characteristics, horsepower, size, etc. All single-phase motors shall have thermal overload protection. If motor-starting equipment is included in packaged units, all three phases shall have overload protection. All motors shall have a power factor of 85 percent or better. All motors 20 horsepower and larger shall be manufacturers Premium Efficiency grade and shall meet the NEMA MG 1-12.54" efficiency ratings for energy efficient motors. All two speed motors, unless otherwise specified, shall be 1800/1200 rpm dual winding type. All 3 phase motors shall be designed and manufactured to be capable of speed control through a variable frequency drive controller.

Motors and other electrical control equipment installed in damp or moist areas or in areas of other special conditions shall be designed and approved for the installation. Motors and electrical equipment in explosive locations shall be approved for those locations. Motors located outside buildings shall be totally enclosed.

Electric Wiring:

All equipment control wiring and all boiler control wiring, water heater control wiring, pump interlocks, automatic temperature control wiring including all necessary contacts, relays, and interlocks, whether low or line voltage, except power wiring, shall be furnished and installed as work of this Division.

All equipment that requires an electrical connection shall be furnished so that it will operate properly and deliver full capacity on the electrical service available and also satisfy the requirements under "Motors," as specified above.

The Mechanical Contractor must refer to the electrical control equipment and wiring shown on the diagrams. Any changes or additions required by specific equipment furnished shall be the complete responsibility of the Contractor furnishing the equipment.

The Mechanical Contractor must coordinate with the Electrical Contractor to insure that all required components of control work are included and fully understood. No additional cost shall accrue to the Owner as a result of lack of such coordination.

WORK, MATERIALS, AND QUALITY OF EQUIPMENT:

Unless otherwise specified, all materials shall be new and of the best quality of their respective kinds and all labor shall be done in a most thorough and workmanlike manner. Work shall be performed by a licensed electrician.

Products or equipment of any of the manufacturers cited herein or any of the products approved by the Addenda may be used. However, where lists of products are cited herein, the one first listed in the design equipment used in drawings and schedules to establish size, quality, function, and capacity standards. If other than design equipment is used, it shall be carefully checked for access to equipment, electrical and control requirements, valving, and piping. Should changes or additions occur in piping, valving, electrical work, etc., or if the work of other Contractors would be revised by the alternate equipment, the cost of all changes shall be borne as work of this Division.

Pipe of foreign manufacture will not be acceptable.

The access to equipment shown on the drawings are the minimum acceptable space requirements. No equipment that reduces or restricts accessibility to this or any other equipment will be considered.

DIVISION 15 – MECHANICAL

SECTION 15055
COMMON PIPING REQUIREMENTS

PRODUCTS

SUPPORTING DEVICES

Hanger and Pipe Attachments: Factory fabricated with galvanized coatings; nonmetallic coated for hangers in direct contact with copper tubing.
Building Attachments: Powder-actuated-type, drive-pin attachments with pullout and shear capacities appropriate for supported loads and building materials; UL listing and FM approval for fire-protection systems.
Mechanical-Anchor Fasteners: Insert-type attachments with pullout and shear capacities appropriate for supported loads and building materials; UL listing and FM approval for fire-protection systems.

EXECUTION

INSTALLATION

Install piping free of sags and bends.
Install fittings for changes in direction and branch connections.
Install sleeves for pipes passing through concrete walls, gypsum-board partitions, and concrete floor and roof slabs.
Exterior Wall, Pipe Penetrations: Mechanical sleeve seals installed in steel or cast-iron pipes for wall sleeves.
Fire-Barrier Penetrations: Seal pipe penetrations with through-penetration firestop systems specified in Division 7.
Install unions adjacent to each valve and at final connection to each piece of equipment.
Install dielectric coupling and nipple fittings to connect piping materials of dissimilar metals in water and steam piping.

HANGERS AND SUPPORTS

Install building attachments within concrete or to structural steel. Install additional attachments at concentrated loads, including valves, flanges, guides, strainers, expansion joints, and at changes in direction of piping.
Install powder-actuated drive-pin fasteners in concrete after concrete is cured. Do not use in lightweight concrete or in slabs less than 4 inches thick.
Install mechanical-anchor fasteners in concrete after concrete is cured. Do not use in lightweight concrete or in slabs less than 4 inches thick.
Support fire-protection system piping independent of other piping.
Load Distribution: Install hangers and supports so piping live and dead loading and stresses from movement will not be transmitted to connected equipment.

END OF SECTION 15055

DIVISION 15 – MECHANICAL

SECTION 15080
MECHANICAL INSULATION

GENERAL

SECTION REQUIREMENTS

Submittals: Product Data for each type of mechanical insulation

Quality Assurance: Labeled with maximum flame-spread rating of 25 and maximum smoke-developed rating of 50 according to ASTM E 84.
Comply with ASHRAE 90.1 for pipe insulation thickness and conductivity requirements.

PRODUCTS

PIPE INSULATION

Preformed Glass-Fiber Pipe Insulation: ASTM C 547, Class 1, with factory-applied, all-purpose, vapor-retarder jacket.

EXECUTION

INSTALLATION

Install vapor barriers on insulated pipes with surface operating temperatures below 60 deg F.
Insulate fittings, valves, and specialties.
Seal vapor-barrier penetrations for hangers, supports, anchors, and other projections.
Coat glass-fiber pipe insulation ends with vapor-barrier coating.
Seal ends of flexible elastomeric cellular insulation with adhesive.
Roof Penetrations: Apply insulation for interior applications to a point even with the top of the roof flashing.

Interior Walls and Partitions Penetrations: Apply insulation continuously through walls and partitions, except fire-rated walls and partitions.

Fire-Rated Walls and Partitions Penetrations: Terminate insulation at penetrations through fire-rated walls and partitions. Seal around penetration with through-penetration firestop systems specified in Division 7.

THESE DOCUMENTS ARE INCOMPLETE WITHOUT FULL COORDINATION WITH BLUEFIELD ENGINEERING.

LICENSED PROFESSIONAL ENGINEER
LIC. 260219
E. TAYLOR GROBERG
01/30/19
STATE OF UTAH

HANSEN ALLEN & LUCE inc ENGINEERS	bluefield engineering.com	DESIGNED TG	3					SCALE	springville PUBLIC WORKS	110 S. MAIN ST SPRINGVILLE, UTAH 84663	400 SOUTH WELL-NO.2 WELL HOUSE HVAC HVAC SPECIFICATIONS	SHEET
		DRAFTED BLUEFIELD	2					AS SHOWN				H-2
		CHECKED BLUEFIELD	1	–	–	TG						
		DATE JANUARY 2019	NO.	DATE	REVISIONS	BY	APVD.					260-44-200

Glass-Fiber Insulation Installation: Bond insulation to pipe with adhesive. Seal seams and joints with vapor-barrier compound.

Flexible Elastomeric Insulation Installation: Seal joints with adhesive.

Interior Piping System Applications: Insulate the following piping systems:
Domestic cold water.

Do not apply insulation to the following systems, materials, and equipment:
Flexible connectors.
Fire-protection piping systems.
Sanitary drainage and vent piping.
Drainage piping located in crawl spaces, unless otherwise indicated.
Below-grade piping.
Chrome-plated pipes and fittings, except for plumbing fixtures for the disabled.
Piping specialties, including air chambers, unions, strainers, check valves, plug valves, and flow regulators.

Pipe Insulation Thickness Application Schedule: Insulate piping with the following materials and thicknesses:

Domestic Cold Water, Hot Water: 1-inch preformed glass-fiber pipe insulation.
Refrigeration piping: 3/4-inch Armaflex.

END OF SECTION 15080

DIVISION 15 – MECHANICAL

SECTION 15110
VALVES

PRODUCTS

GENERAL-DUTY VALVES

End Connections: Threads shall comply with ANSI B1.20.1. Flanges shall comply with ANSI B16.1 for cast-iron valves and ANSI B16.24 for bronze valves. Solder-joint connections shall comply with ANSI B16.18.
Ball Valves: Rated for 200-psig (1379-kPa) saturated steam pressure, 400-psig (2760-kPa) WOG pressure; 2-piece construction; with bronze body, standard (or regular) port, chrome-plated brass ball, replaceable "Teflon" or "TFE" seats and seals, blowout-proof stem, and vinyl-covered steel handle.
Plug Valves: Rated at 200-psig (1379-kPa) WOG; bronze body, with straightaway pattern, square head, and threaded ends.
Valves for Copper Tube: Solder ends, except provide threaded ends for heating hot water and low-pressure steam service.
Valves for Steel and Plastic Pipe: Threaded ends.

EXECUTION

INSTALLATION

Use gate and ball valves for shutoff duty; globe and ball for throttling duty.
Locate valves for easy access and provide separate support where necessary.
Install valves for each fixture and item of equipment.
Install three-valve bypass around each pressure-reducing valve using throttling-type valves.
Install valves in horizontal piping with stem at or above center of pipe.
Install valves in a position to allow full stem movement.
Install check valves for proper direction of flow in horizontal position with hinge pin level.

END OF SECTION 15110

DIVISION 15 – MECHANICAL

SECTION 15140
WATER PIPING

GENERAL

SECTION REQUIREMENTS

Performance Requirements: Unless otherwise indicated minimum pressure requirements for water piping are as follows:
Domestic Water Piping: 200 psig.
Comply with NSF 61 "Drinking Water System Components -- Health Effects."

PRODUCTS

PIPES AND TUBES
Hard Copper Tube: ASTM B 88, Types L and M, water tube, drawn temper.
Soft Copper Tube: ASTM B 88, Type L water tube, annealed temper.

FITTINGS
Wrought-Copper, Solder-Joint Pressure Fittings: ASME B 16.22.
Cast-Copper-Alloy, Solder-Joint Pressure Fittings: ASME B 16.18.
Bronze Flanges: ASME B 16.24, Classes 150 and 300.
Copper Unions: ASME B 16.18, cast-copper-alloy body, hexagonal stock, with ball-and-socket joint, metal-to-metal seating surfaces, and solder-joint, threaded, or solder-joint and threaded ends. Threads complying with ASME B 1.20.1.

JOINING MATERIALS

Solder Filler Metal: ASTM B 32, lead free.
Brazing Filler Metals: AWS A5.8, alloys to suit system requirements.
Welding Filler Metals: Comply with AWS D10.12 for welding materials appropriate for wall thickness and chemical analysis of steel pipe being welded.

EXECUTION

PIPING APPLICATIONS

Install listed pipe materials and joining methods below in the following applications:

Aboveground: Hard copper tube, Type L ; wrought-copper or cast-copper-alloy pressure fittings; copper unions; bronze flanges; and solder joints.

VALVE APPLICATIONS

Install gate valves close to main on each branch and riser serving two or more plumbing fixtures or equipment connections and where indicated.
Install gate or ball valves on inlet to each plumbing equipment item, on each supply to each plumbing fixture not having stops on supplies, and elsewhere as indicated.
Install drain valve at base of each riser, at low points of horizontal runs, and where required to drain water distribution piping system.

PIPING INSTALLATIONS

Install hangers and supports at intervals indicated in the applicable plumbing code and as recommended by pipe manufacturer.
Support vertical piping at each floor.

INSPECTING AND CLEANING

Inspect and test piping systems following procedures of authorities having jurisdiction.
Clean and disinfect water distribution piping following procedures of authorities having jurisdiction.

END OF SECTION 15140

DIVISION 15 – MECHANICAL

SECTION 15680
MODULAR AIR HANDLERS

PART 1 GENERAL

1.01 WORK INCLUDED

A. Modular Air Handling Units.

1.02 RELATED SECTIONS

A. Temporary Heating, Cooling, and Ventilating.

1.03 REFERENCES

A. AMCA 300 – Reverberant Method for Sound Testing of Fans.
B. AMCA 301 – Method for Publishing Sound Ratings for Air Moving Devices.
C. ANSI/AFBMA 9 – Load Ratings and Fatigue Life for Ball Bearings.
D. ANSI/UL 900 – Test Performance of Air Filter Units.
E. ARI 260 – Standard for Sound Rating of Ducted Air Moving and Conditioning Equipment
F. ARI 410 – Standard for Forced Circulation Air-Cooling and Air-Heating Coils.
G. ARI 430 – Standard for Central Station Air Handling Units.
H. ARI 1060 Air-To-Air Energy Recovery Ventilation Equipment
I. ASHRAE 68 – Laboratory Method of Testing In-Duct Sound Power Measurement Procedure for Fans.
J. ASTMB 117 – Standard Practice for Operation Salt Spray Apparatus
K. NEMA MG1 – Motors and Generators
L. NFPA 90 A & B – Installation of Air Conditioning and Ventilation Systems and Installation of Warm Air Heating and Air Conditioning Systems.
M. SMACNA – HVAC Duct Construction Standards.
N. UL 1995 – Heating and Cooling Equipment

1.04 QUALITY ASSURANCE

A. Air Coils: Certify capacities, pressure drops and selection procedures in accordance with current ARI 410 Standard.
B. Certify air-handling units in accordance with ARI 430.
C. ISO 9001 Certification.

1.05 SUBMITTALS

A. Submit unit performance including: capacity, nominal and operating performance.
B. Submit Mechanical Specifications for unit and accessories describing construction, components and options.
C. Submit shop drawings indicating overall dimensions as well as installation, operation and service clearances. Indicate lift points and recommendations. Indicate unit shipping split locations, and split dimensions, installation and operating weights including dimensions.
D. Provide fan curves with specified operating point clearly plotted.
E. Submit data on electrical requirements. Include safety and start-up instructions.
F. Submit sound data certified to ARI 260.

1.06 REGULATORY REQUIREMENTS

A. Unit shall be manufactured to conform to UL 1995 Standard and shall be listed by either UL/CUL or ETL. Units shall be provided with listing agency label affixed to unit. In the event the unit is not UL/CUL or ETL approved, the contractor shall, at his/her expense provide for a field inspection by a UL/CUL or ETL representative to verify conformance. If necessary, contractor shall perform modifications to the unit to comply with UL/CUL or ETL as directed by the representative, at no additional expense to the owner.
B. Certify air-handling units in accordance with ARI 430. If air-handling units are not certified in accordance with ARI 430, contractor shall be responsible for expenses associated with testing of units after installation to verify performance of fan(s). Any costs incurred to adjust fans to meet scheduled capacities shall be the sole responsibility of the contractor.
C. Certify air-handling coils in accordance with ARI 410. If air-handling coils are not certified in accordance with ARI 410, contractor shall be responsible for expenses associated with testing of coils after installation to verify performance of coil(s). Any costs incurred to adjust coils to meet scheduled capacities shall be the sole responsibility of the contractor.

1.07 DELIVERY, STORAGE, AND HANDLING

A. Comply with manufacturer's installation instructions for rigging, unloading, and transporting units.
B. Units shall ship fully assembled up to practical shipping and rigging limitations. Units not shipped fully assembled shall have tags and airflow arrows on each section to indicate location and orientation in direction of airflow. Shipping splits shall be clearly defined on submittal drawings. Cost associated with non conformance to shop drawings shall be the responsibility of the manufacturer. Each section shall have lifting lugs or shipping skid to allow for field rigging and final placement of section.
C. Deliver units to jobsite with fan motor(s), sheave(s), and belt(s) completely assembled and mounted in units.
D. Store in clean dry place and protect from weather and construction traffic. Handle carefully to avoid damage to components, enclosures, and finish.

1.08 START-UP AND OPERATING REQUIREMENTS

A. Do not operate units for any purpose, temporary or permanent, until ductwork is clean, filters in place, bearings lubricated (if applicable), condensate properly trapped, piping connections verified and leak-tested, belts aligned and tensioned, all shipping braces removed, bearing set screws torqued, and fan has been test run under observation.

1.09 WARRANTY

A. The equipment manufacturer shall provide, at no additional cost, a standard parts warranty that covers a period of one year from unit start-up or 18 months from shipment, whichever occurs first. This warrants that all products are free from defects in material and workmanship and shall meet the capacities and ratings set forth in the equipment manufacturer's catalog and bulletins.

PART 2 PRODUCTS

2.01 ACCEPTABLE MANUFACTURERS

A. Approved manufacturer shall be Trane, with pre-approved alternates considered. Manufacturers not pre-approved, must obtain pre-approval in writing from consulting engineer prior to bid day. Alternates must comply with all performance and features as called for in this specification. Job awarded on basis of specified equipment. Alternate will be evaluated and considered after job is awarded.
B. Manufacturer must clearly define any exceptions made to Plans and Specifications. Any deviations in layout or arrangement shall be submitted to consulting engineer prior to bid date. Acceptance of deviation(s) from specifications shall be in the form of written approval from the consulting engineer. Mechanical Contractor is responsible for expenses that occur due to exceptions made.
C. Approved Custom Manufacturers
1. Trane
2. Temtrol
3. System Aire
4. Haakon

2.02 GENERAL

A. Unit layout and configuration shall be as defined in project plans and schedule.
B. Provide unit mounting legs to support all sections of unit and raise unit for proper trapping. Contractor will be responsible for providing a housekeeping pad when unit mounting device is not of sufficient height to properly trap unit. Unit mounting devices not constructed of galvanized steel shall be chemically cleaned and coated with both a rust-inhibiting primer and finished coat of rust-inhibiting enamel.

2.03 UNIT CASING

A. Unit shall be constructed of a complete structural frame with removable panels. Unit manufacturer shall ship separate segments so unit can be broken down for ease of installation in tight spaces. The entire air handler shall be constructed of galvanized steel. Casing finished to meet ASTMB 117 250-hour salt-spray test. The removal of side panels shall not affect the structural integrity of the unit. All removable panels shall be gasketed to minimize air leakage. All doors shall have gasketing around full perimeter to prevent air leakage. Contractor shall be responsible to provide connection flanges and all other framework that is needed to properly support the unit.

B. Construct casing sections capable of operating from -4"wg to +6"wg .

C. Access panels and/or access doors shall be available on both sides of the unit in all sections to allow easy access to drain pan, coil(s), motor, drive components and bearings for cleaning, inspection, and maintenance. If panels are not removable, then manufacturer shall provide access sections with doors between all internal components to ensure access and cleanability of the air handler.

D. Access doors shall be double wall construction to prevent damage to insulation during routine maintenance.
E. Access panels and doors shall be fully removable without the use of specialized tools to allow complete access of all interior surfaces.
F. Door hardware shall be surface mounted to minimize penetrations in the door casing that could lead to air leakage paths.
G. All joints between exterior panels and structural frames, as well as joints between module frames, shall be properly sealed and gasketed to provide an air seal.
H. Insulation – High density – Insulation shall be encased in double-wall casing between exterior and interior solid panel such that no insulation can erode to the airstream. Foil facing on insulation is not an acceptable alternate to double wall construction. Insulation shall have a minimum R-Value of 8 and shall be UL listed. The installation shall comply with NFPA-90A and B requirements.

2.04 FANS

A. Provide fans of type and class as specified on the schedule. Fan shafts shall be solid, coated with a rust-inhibiting coating, and properly designed so that fan shaft does not pass through first critical speed as unit comes up to rated RPM. All fans shall be statically and dynamically tested by the manufacturer for vibration and alignment as an assembly at the operating RPM to meet design specifications. Fans controlled by variable frequency drives shall be statically and dynamically tested for vibration and alignment at speeds between 25% and 100% of design RPM. If fans are not factory-tested for vibration and alignment, the contractor shall be responsible for cost and labor associated with field balancing and certified vibration performance. Fan wheels shall be keyed to fan shafts to prevent slipping.

B. Provide grease lubricated ball bearings selected for L-50 200,000-hour average life per ANSI/AFBMA 9. Greasable bearings shall have lubrication lines extended to the drive side of the unit. Lubrication lines shall be a clear, high-pressure, polymer to aid in visual inspection. Extend both grease lubrication lines to drive side of unit and rigidly attach to drive side bearing support with zerk fittings. If extended lubrication lines are not provided, manufacturer shall provide permanently lubricated bearing with engineering calculations for proof of bearing life.

C. Fans shall be mounted on isolation bases. Internally-mounted motor shall be on the same isolation base. Fan and motor shall be internally isolated with spring isolators. Flexible canvas ducts shall be installed between fan and unit casing to ensure complete isolation. Flexible canvas ducts shall comply with NFPA 90A and UL 181 requirements. If fans and motors are not internally isolated, then the entire unit shall be externally isolated from the building, including supply and return duct work, piping, and electrical connections. External isolation shall be furnished by the contractor in order to avoid transmission of noise and vibration through the ductwork and building structure.

D. Fan modules shall have a minimum of one access door located on the drive side of the unit to allow inspection and maintenance of the fan, motor, and drive components. Construct door(s) per Section 2.03 paragraphs D, E, and F.

E. Belts shall be enclosed as required by OSHA standard 29 CFR 1910 to protect worker from accidental contact with the belts and sheaves.

F. MOTORS AND DRIVES

1. All motors and drives shall be factory-installed and run tested. All motors shall be installed on a slide base to permit adjustment of belt tension. Slide base shall be designed to accept all motor sizes offered by the air-handler manufacturer for that fan size to allow a motor change in the future, should airflow requirements change. Fan sections without factory-installed motors shall have motors field installed by the contractor. The contractor shall be responsible for all costs associated with installation of motor and drive, alignment of sheaves and belts, run testing of the motor, and balancing of the assembly.
2. Fan Motors shall be heavy duty, open drip-proof (ODP)high efficiency, operable at 460 volts, 60Hz, 3-phase
3. Motors shall be selected to operate continuously at 104 F (40 C) ambient without tripping of overloads. Motors shall have a +/- 10 percent voltage utilization range to protect against voltage variation. Motors shall be in compliance with EPACT when applicable. Motors shall have Class F Insulation.
4. V-Belt Drive shall be constant pitch rated at 1.2 times the motor nameplate.
5. Manufacturer shall provide for each fan a nameplate with the following information to assist air balance contractor in start up and service personnel in maintenance:
a. Fan and motor sheave part number
b. Fan and motor bushing part number
c. Number of belts and belt part numbers
d. Fan design RPM and motor HP
e. Belt tension and deflection
f. Center distance between shafts

6. Combination Starter / Disconnect – A combination starter / disconnect is provided for each fan motor. Each starter / disconnect is properly sized, factory mounted, and wired to the fan motor to facilitate temporary heating, cooling, ventilation, and/or timely completion of the project. Starter / disconnects include a circuit breaker disconnect with a through-the-door interlocking handle spring loaded and designed to rest only in the full "ON" or "OFF" state and is lockable in these states. A concealed defeater mechanism allows entry into the enclosure when the handle is in the "ON" position. Cover mounted controls include a Hand-Off-Auto switch and a reset button. Also included are fused control transformers, one N.O. auxiliary contact, and manual reset overloads. Starter/disconnects have full metal NEMA type 1 enclosure with a durable painted finish.

2.05 COILS

A. Install coils such that headers and return bends are enclosed by unit casing to ensure that if condensate forms on the header or return bends, it is captured by the drainpan under the coil.
B. Coils shall be manufactured with plate fins to minimize water carryover and maximize airside thermal efficiency. Fin tube holes shall have drawn and belled collars to maintain consistent fin spacing to ensure performance and air pressure drop across the coil as scheduled. Tubes shall be mechanically expanded and bonded to fin collars for maximum thermal conductivity. Use of soldering or tinning during the fin-to-tube bonding process is not acceptable due to the inherent thermal stress and possible loss of bonding at that joint.
C. Construct coil casings of galvanized steel. End supports and tube sheets shall have belled tube holes to minimize wear of the tube wall during thermal expansion and contraction of the tube.
D. All coils shall be completely cleaned prior to installation into the air handling unit. Complete fin bundle in direction of airflow shall be degreased and steam cleaned to remove any lubricants used in the manufacturing of the fins, or dirt that may have accumulated, in order to minimize the chance for water carryover.
E. On stacked cooling coils, intermediate drain pans shall be installed between the coils. Intermediate drain pans shall have drop tubes to guide condensate to the main drain pan, thus preventing flooding of lower coils that would result in moisture carryover.
F. Hydronic Coils
1. Supply and return header connections shall be clearly labeled on outside of units such that direction of coil water-flow is counter to direction of unit air-flow.
2. Coils shall be proof tested to 400 psig and leak tested to 300 psig air pressure under water.
3. Headers shall be constructed of round copper pipe with brass connections (no cast iron allowed).
4. Tubes shall be 1/2 inch O.D. minimum 0.016 inch thick copper. Fins shall be aluminum.
5. Any and all brazing materials shall contain no lead additives.
6. NSF certified.

2.06 BASE-LEVEL DRAIN PANS

A. Insulation shall be encased between exterior and interior walls. Units with cooling coils shall have drain pans under complete cooling coil section that extend beyond the air-leaving side of the coil to ensure capture of all condensate in section. Cooling coil drain pans shall be sloped in 2 planes, pitched toward drain connections to ensure complete condensate drainage when unit is installed level and trapped per manufacturer's requirements. See section 2.05, paragraph E for specifications on intermediate drain pans between cooling coils.
B. Units with heating coils shall have a drain pan under complete heating coil section sloped in 2 planes and pitched toward drain connections to ensure proper drainage during cleaning and to capture water in the event of a coil failure.
C. All drain pan connections supplied by unit manufacturer including, piping, and piping connections extending from stainless steel drain pans shall be constructed of stainless steel. The contractor is responsible to ensure the unit is installed level, trapped in accordance with the manufacturer's requirements, and visually inspected to ensure proper drainage of condensate.
D. Flat drain pans shall be acceptable in sections that may have incidental, but not continuous contact with moisture. Flat drainpans shall be accessible for cleaning.

2.07 FILTERS

A. Provide factory-fabricated filter section of the same construction and finish as unit casings. Filter section shall have filter guides and access door(s) extending the full height of the casing to facilitate filter removal. Construct doors in accordance with Section 2.03, paragraphs D, E, and F. Provide filter blockoffs as required to prevent air bypass around filters.
B. Filter type, efficiency, and arrangement shall be provided as defined in project plans and schedule. Filters shall be removable from one side of filter section(s).
C. Manufacturer shall provide one set of startup filters and an additional 1 set of operational filters.
D. Provide aluminum screen prefilter.

END OF SECTION 15680

THESE DOCUMENTS ARE INCOMPLETE WITHOUT FULL COORDINATION WITH BLUEFIELD ENGINEERING.

LICENSED PROFESSIONAL ENGINEER
NO. 260219
E. TAYLOR GROBERG
01/30/19
STATE OF UTAH

DIVISION 15 – HVAC

SECTION 15815
METAL DUCTS

GENERAL

1. Duct system design, as indicated, has been used to select and size air–moving and –distribution equipment and other components of air system. Changes to layout or configuration of duct system must be specifically approved in writing by Architect. Accompany requests for layout modifications with calculations showing that proposed layout will provide original design results without increasing system total pressure.

2. Duct material: galvanized, sheet steel, lock–forming quality; ASTM A 653/A 653M, coating designation; mill–phosphatized finish for surfaces of ducts exposed to view. Stainless steel in chlorine environments.

3. Underground duct shall be PVC pipe or PVC coated galvanized steel encased in concrete.

4. Duct liner: Comply with NFPA 90A or NFPA 90B and NAIMA's "Fibrous Glass Duct Liner Standard." ASTM C 1071 with coated surface exposed to airstream to prevent erosion of glass fibers.
   a. Thickness: 1".
   b. Thermal Conductivity (k–Value): .26 at 75 deg Fmean temperature.
   c. Fire–Hazard Classification: Maximum flame–spread rating of 25 and smoke–developed rating of 50, when tested according to ASTM C 411.
   d. Liner Adhesive: Comply with NFPA 90A or NFPA 90B and ASTM C 916.

5. Round duct: Diameter as applied to flat–oval ducts in this Article is the diameter of the size of round duct that has a circumference equal to perimeter of a given size of flat–oval duct.
   a. Round Ducts: Fabricate supply ducts of galvanized steel according to SMACNA's "HVAC Duct Construction Standards––Metal and Flexible."
   b. Branch supply ducts are to be Unico system low temperature insulated round duct supply kits.
   c. Fittings are to be Unico system fittings.

6. Rectangular duct: Fabricate ducts, elbows, transitions, offsets, branch connections, and other construction with galvanized, sheet steel, according to SMACNA's "HVAC Duct Construction Standards––Metal and Flexible." Comply with requirements for metal thickness, reinforcing types and intervals, tie–rod applications, and joint types and intervals.
   a. Lengths: Fabricate rectangular ducts in lengths appropriate to reinforcement and rigidity class required for pressure classification.
   b. Materials: Free from visual imperfections such as pitting, seam marks, roller marks, stains, and discolorations.

7. Static–Pressure Classifications: Unless otherwise indicated, construct ducts to the following:
   a. Supply Ducts: 3" wg.
   b. Return Ducts: 2" wg, negative pressure.
   c. Exhaust Ducts: 2" wg, negative pressure.

8. Cross Breaking or Cross Beading: Cross break or cross bead duct sides 19" and larger and .0359" thick or less, with more than 10Ø of unbraced panel area, unless ducts are lined.

END OF SECTION 15815

DIVISION 15 – HVAC

SECTION 15820
AIR DUCT ACCESSORIES

GENERAL

1. Volume dampers: Factory fabricated with required hardware and accessories. Stiffen damper blades for stability. Include locking device to hold single–blade dampers in a fixed position without vibration. Close duct penetrations for damper components to seal duct consistent with pressure class.

2. Pressure Classifications of or Higher: End bearings or other seals for ducts with axles full length of damper blades and bearings at both ends of operating shaft.

3. Fire Dampers: Labeled to UL 555.
   a. Fire Rating: One and one–half and three hours.
   b. Frame: SMACNA Type B with blades out of airstream; fabricated with roll–formed, thick galvanized steel; with mitered and interlocking corners.
   c. Provide access door though ductwork and other systems for damper access.
   d. Fusible Link: Replaceable, 165° rated as indicated.

4. Manufactured Turning Vanes: Fabricate of 1.5" wide, curved blades set 3/4" o.c.; support with bars perpendicular to blades set 2" o.c.; and set into side strips suitable for mounting in ducts.

5. Flexible Ducts, Insulated: Factory–fabricated, insulated, round duct, with an outer jacket enclosing 1.5" thick, glass–fiber insulation around a continuous inner liner.

END OF SECTION 15820

DIVISION 15 – HVAC

SECTION 15830
HVAC POWER VENTILATORS

GENERAL
1. Fan description: Centrifugal fans designed for installing in ceiling or wall, or for concealed in–line applications.
2. Housing: Corrosion Resistant Plastic.
3. Fan Wheel: Centrifugal wheels directly mounted on motor shaft. Fan shrouds, motor, and fan wheel shall be removable for service.
4. Grille: Not Applicable.
5. Electrical Requirements: Junction box for electrical connection on housing and receptacle for motor plug–in.
6. Variable–Speed Controller: Solid–state control to reduce speed from 100 percent to less than 50 percent.
7. Accessories: Manufacturer's standard roof jack or wall cap, and transition fittings.
8. Provide wall cap and room grille with each fan.

END OF SECTION 15830

DIVISION 15 – HVAC

SECTION 15870
DIFFUSERS, REGISTERS AND GRILLES

GENERAL
The frames for all registers, grilles, and diffusers shall match type of ceiling where they are to be installed. Special frames shall be provided for narrow T–bar ceilings. Refer to reflected ceiling plan and other specification divisions for ceiling type.

1. Floor supply and return registers and grilles shall be Titus CT–541 Linear Bar with Heavy Duty core support and Heavy Duty floor mounting frame Type 5 and Type A fasteners.

2. Sidewall return–air grilles from floor to 6 feet 0 inches above the floor shall be sight–proof, heavy–duty gymnasium type equal to Titus 33RL or 33RS with horizontal 40–degree deflection blades, baked enamel finish; grilles above 6 feet 0 inches from the floor shall be Titus 350RL, or 350RS with horizontal 40–degree deflection blades, baked enamel finish.

3. Exhaust–air registers in other than lay–in ceilings shall be Titus 355FL or 355FS with 40–degree deflection horizontal extruded aluminum blades with opposed–blade damper, baked enamel finish. Exhaust registers from 6 feet 0 inches above floor shall be sight–proof, heavy–duty gymnasium type equal to Titus 33RL or 33RS with horizontal 40–degree deflection blades, baked enamel finish with opposed blade damper.

4. Transfer grilles in ceilings shall be the same as specified for return–air grilles for that type of ceiling. Transfer grilles in walls shall be the same type as specified for return–air grilles in walls.

5. Door grilles shall be Titus T700L, nonvision with telescoping frame, baked enamel finish.

6. Return–air registers shall be the same as specified for exhaust registers.

7. Sidewall supply registers shall be aluminum Titus 300FS with opposed blade damper, baked enamel finish. Finish color as selected by Architect.

8. Ceiling supply registers shall be aluminum Titus 300FS with opposed blace damper, baked enamel finish. Finish color as selected by Architect.

9. Drum louvers shall be by Titus or equal.

END OF SECTION 15870

DIVISION 15 – HVAC

SECTION 15900
TEMPERATURE CONTROLS

GENERAL
1. A programmable temperature contoller shall be located in each zone and shall control the air handler, exhaust fan and unit heaters according to documented sequence to maintain the space temperature setpoint.

2. Exhaust fans shall also operate based on hand–off–auto wall switch.

END OF SECTION 15900

DIVISION 15 – HVAC

SECTION 15950
TESTING, ADJUSTING, BALANCING AND MAINTENANCE MANUALS

GENERAL

1. All air and water systems to be tested and balanced by an independent testing and balancing firm approved by the engineer. All systems shall be adjusted to perform within 5% of the design document requirements. A complete report shall be provided at the completion of the work.

2. Each system shall be commissioned to insure correct operation. A complete report shall be provided at the completion of the work.

3. Complete maintenance and operations manuals shall be provided for all equipment in the building.

END OF SECTION 15950

DIVISION 15 – HVAC

SECTION 15990
CONTROLS SEQUENCE

GENERAL

1. The mechanical system consists of a pump station, requiring heating and cooling. There is an air handler with a process water cooling coil, and 2 electrical unit heaters for cooling and heating. A stand–alone controller will provide temperature monitoring, and sequencing of cooling and heating equipment.

2. The Controller will be a Honeywell T775 Series, with temperature inputs, and 4 digital outputs, or equal. It will be housed in a NEMA 1 control panel, with low voltage transformer, wiring terminal strip, and other devices to accomplish the sequence of operation. Line voltage to be supplied by electrical contractor.

3. The Controller will monitor space temperature, through a wall mounted temperature sensor. It may be mounted on the control panel.

4. Cooling Mode: The controller will turn on the air handler, and open the cooling coil control valve, when the space temperature rises above a setpoint of 80F. As the space temperature drops below 70F, the controller will close the valve, and shut down the air handler. The setpoints will be adjustable by the owner. A blue indicator will energize, when the system is in cooling mode.

5. The chilled water coil control valve will be a Belimo B238+ARB24–3, Open/Close valve, with stainless steel trim, with 200 PSI close off rating, or equal. A flow control device will ensure 40 GPM through the coil. The device will be a Griswold auto flow control, K–Valve series, model no. 3818KDO, or equal.

6. Heating Mode: The controller will stage on the two electric unit heaters, to maintain the space heating temperature setpoints. Unit Heater UH1A will start below 55F, and stop above 65F space temperature. Unit Heater UH1B will start below 50F, and stop above 60F space temperature. Unit Heater UH1C will start below 45F, and stop above 55F space temperature. The setpoints will be adjustable by the owner. The panel will indicate the command state of each unit heater, with a red indicator.

END OF SECTION 15990

THESE DOCUMENTS ARE INCOMPLETE WITHOUT FULL COORDINATION WITH BLUEFIELD ENGINEERING.

LICENSED PROFESSIONAL ENGINEER
No. 260219
E. TAYLOR GROBERG
01/30/19
STATE OF UTAH

HANSEN ALLEN & LUCE inc ENGINEERS

bluefield engineering.com

DESIGNED TG	3				
DRAFTED BLUEFIELD	2				
CHECKED BLUEFIELD	1	–	–	TG	
DATE JANUARY 2019	NO.	DATE	REVISIONS	BY	APVD.

SCALE
AS SHOWN

springville PUBLIC WORKS

110 S. MAIN ST
SPRINGVILLE, UTAH
84663

400 SOUTH WELL–NO.2 WELL HOUSE
HVAC
HVAC SPECIFICATIONS

SHEET
H–4
260–44–200

POWER ONE-LINE SYMBOLS

THIS IS A STANDARD LEGEND NOT ALL SYMBOLS MAY BE USED ON THIS PROJECT

- ANTENNA
- EQUIPMENT GROUND CONNECTION
- TRANSFER SWITCH
  - ATS: AUTOMATIC TRANSFER SWITCH
  - MTS: MANUAL TRANSFER SWITCH
- VFD — VARIABLE FREQUENCY DRIVE MOTOR CONTROLLER
- F — FUSED DISCONNECT SWITCH
- NON-FUSED DISCONNECT SWITCH
- COMBINATION STARTER
- MAGNETIC CONTROLLER
- HP — MOTOR (HP SHOWN)
- GENERATOR
- WIRE — CONDUCTOR WITH CALLOUT REFERENCE (SEE CONDUIT/CONDUCTOR SCHEDULE)
- POWER FACTOR CAPACITOR
- CIRCUIT BREAKER
- POWER FEED
- CONNECTION POINT
- LUG
- DELTA WYE
- M — UTILITY METERING SOCKET WITH CIRCUIT BREAKER
- M — EXISTING UTILITY METERING SOCKET
- M — UTILITY METERING SOCKET
- M — FUTURE UTILITY METERING SOCKET
- UTILITY METERING CURRENT TRANSFORMER
- MOTOR STARTER
- SURGE PROTECTOR
- TRANSFORMER
- FUSED SWITCH
- FUSE IN HOLDER
- PNL — EXISTING POWER DISTRIBUTION PANEL
- PNL — POWER DISTRIBUTION PANEL
- PNL — FUTURE POWER DISTRIBUTION PANEL

CONTROL ONE-LINE SYMBOLS

THIS IS A STANDARD LEGEND NOT ALL SYMBOLS MAY BE USED ON THIS PROJECT

- ENCLOSURE OR CONTROL PANEL
- A-XX — HOME RUN TO POWER PANEL "A" CIRCUIT "XX"
- R — LIGHT
  - A: AMBER LENS
  - G: GREEN LENS
  - R: RED LENS
  - W: WHITE LENS
- COMBINATION MOTOR STARTER
  - F: FUSED
  - BLANK: CIRCUIT BREAKER
- NUMBER — EQUIPMENT IDENTIFICATION TAG
- ELECTRICAL CONNECTION POINT
- SINGLE RECEPTACLE

PLAN SYMBOLS

THIS IS A STANDARD LEGEND NOT ALL SYMBOLS MAY BE USED ON THIS PROJECT

EQUIPMENT

- CIRCUIT DISTRIBUTION PANELBOARD SURFACE MOUNTED
- CIRCUIT DISTRIBUTION PANELBOARD RECESSED
- POWER DISTRIBUTION PANELBOARD SURFACE OR FLOOR MOUNTED
  - DOORS DESIGNATE FRONT OF PANEL
  - MDP DESIGNATES MAIN DISTRIBUTION PANEL
- CONTROL PANEL ENCLOSURE
- LIGHTING CONTROL PANEL
- DISCONNECT
- COMBO STARTER/DISCONNECT

HVAC EQUIPMENT

- UNIT HEATER, WALL MOUNTED
- UNIT HEATER, CEILING MOUNTED
- CONDENSING UNIT, PAD MOUNTED, SIDE DISCHARGE
- CONDENSING UNIT, PAD MOUNTED, UP FLOW
- ROOFTOP MOUNTED EQUIPMENT

GENERAL DRAWING SYMBOLS

THIS IS A STANDARD LEGEND NOT ALL SYMBOLS MAY BE USED ON THIS PROJECT

- 1 — REFERENCE NOTE
- 1 — DEMOLITION NOTE
- 1 — REVISION NOTE
- 1 — IDENTIFICATION NOTE
- NO — PHOTO REFERENCE
- XX/XX — EQUIPMENT REFERENCE
- XXX — WIRE SIZE REFERENCE
- PHOTO XXXX/XXXX — PHOTO REFERENCE
- A/– — SECTION/ELEVATION REFERENCE
- XXX–XXX — EQUIPMENT ID TAG

LIGHT SWITCHES

THIS IS A STANDARD LEGEND NOT ALL SYMBOLS MAY BE USED ON THIS PROJECT

- $ — SINGLE POLE SWITCH
- $$ — GANGED SWITCHES IN COMMON BOX WITH COMMON COVER PLATE
- $a — SWITCH SUPERSCRIPT MODIFIER, LOWER CASE LETTER INDICATES CIRCUIT CONTROLLER –– a,b,c ETC. MAY BE COMBINED WITH CIRCUIT NUMBER. EXAMPLE: 1a, 3b
- $3 — SWITCH SUBSCRIPT MODIFIER, UPPER CASE LETTER OR NUMBER:
  - 2 = DOUBLE POLE
  - 3 = THREE WAY
  - 4 = FOUR WAY
  - K = KEY OPERATED
  - M = HORSEPOWER RATED MANUAL STARTER
  - MC = MOMENTARY CONTACT, THREE POSITION
  - MS = MANUAL (STARTER) OR SWITCH
  - D = DIMMER
  - S = SURFACE
  - F = FLUSH
  - WP = WEATHER PROOF

CONDUIT AND RACEWAYS

THIS IS A STANDARD LEGEND NOT ALL SYMBOLS MAY BE USED ON THIS PROJECT

- RACEWAY OR WIRING SYSTEM IN OR UNDER FLOOR OR CONCEALED IN WALL OR BEHIND STRUCTURE OR EQUIPMENT OR CONDUIT ROUTED BELOW GRADE IN CONCRETE ENCASEMENT
- FLEX CONDUIT
- RACEWAY OR WIRING SYSTEM ABOVE FLOOR LEVEL BELOW CEILING, EXPOSED
- HOMERUN: DESIGNATIONS INDICATE A ONE-LINE DIAGRAM OR PANELBOARD SCHEDULE REFERENCE
- J — JUNCTION BOX
- RACEWAY OR WIRING SYSTEM TURNED TOWARD THE VIEWER (UP ON PLAN DRAWINGS)
- RACEWAY OR WIRING SYSTEM TURNED AWAY FROM THE VIEWER (DOWN ON PLAN DRAWINGS)
- RACEWAY OR WIRING SYSTEM CHANGE IN ELEVATION OR DISTANCE FROM VIEWER
- CONDUIT STUB AND CAP

GROUNDING SYMBOLS

THIS IS A STANDARD LEGEND NOT ALL SYMBOLS MAY BE USED ON THIS PROJECT

- GROUND ROD (3/4" x 10' COPPER COATED STEEL)
- GROUND ROD (3/4" x 10' COPPER COATED STEEL) IN WELL
- BOLTED GROUND CONNECTION (ABOVE GROUND)
- WELDED GROUND CONNECTION (BELOW GRADE)
- GROUND CONDUCTOR

WIRING DEVICES

THIS IS A STANDARD LEGEND NOT ALL SYMBOLS MAY BE USED ON THIS PROJECT

- 20 AMP RATED RECEPTACLE
  - SINGLE STROKE = SINGLE
  - DOUBLE STROKE = DUPLEX
- RECEPTACLE MODIFIERS:
  - X–X = CIRCUIT NUMBER
  - AF = ARC FAULT CIRCUIT INTERRUPTER
  - S = SURFACE MOUNTED
  - IG = ISOLATED GROUND
  - WP = WEATHER PROOF
- EXISTING RECEPTACLE
- 220V RECEPTACLE
- GFCI RECEPTACLE
- ELECTRICAL CONNECTION
- J — JUNCTION BOX
- P — PHOTOELECTRIC CONTROL UNIT
- T — THERMOSTAT LOCATION
- CARD READER (ENTRY KEY PAD)

LIGHTING SYMBOLS

THIS IS A STANDARD LEGEND NOT ALL SYMBOLS MAY BE USED ON THIS PROJECT

- F1 — DESIGNATES FIXTURE NUMBER – REFER TO FIXTURE SCHEDULE
- PC — PHOTOCELL

LED FIXTURES

- SURFACE OR RECESSED 1X4 FIXTURE

EXTERIOR LIGHTS

- WALL PAK FIXTURE

MOTOR AND EQUIPMENT

THIS IS A STANDARD LEGEND NOT ALL SYMBOLS MAY BE USED ON THIS PROJECT

- HP — MOTOR (HP SHOWN)
- F — FRACTIONAL HORSEPOWER MOTOR
- $T WP — WEATHERPROOF THERMAL DISCONNECT SWITCH
- MOTOR STARTER, INDIVIDUAL, NOT LOCATED IN A MOTOR CONTROL CENTER (MCC) OR SIMILAR GROUP ASSEMBLY
- COMBINATION MOTOR STARTER ASSEMBLY, NOT LOCATED IN AN MCC OR SIMILAR ASSEMBLY
- MAGNETIC CONTACTOR ASSEMBLY, NOT LOCATED IN AN MCC OR SIMILAR ASSEMBLY
- XXXA — DISCONNECT, NON-FUSED, 3 POLE, 100A RATED
- F — FUSED DISCONNECT SWITCH
- FIELD CONNECTION OR ELECTRICAL TERMINATION AT A FIELD DEVICE
- XXXXX — EQUIPMENT DESIGNATION

H.P.E. INC. ELECTRICAL ENGINEERS
POWER SYSTEMS, CONTROL & INSTRUMENTATION SYSTEMS
HEGERHORST POWER ENGINEERING INCORPORATED (801) 642-2051
708 EAST 50 SOUTH FAX (801) 642-2154
AMERICAN FORK, UT 84003

HPE PROJECT 18106
© 2019
FOR INFORMATION ABOUT THIS JOB, PLEASE CONTACT: KEITH HEGERHORST

GENERAL NOTES:

1. VERIFY ALL EQUIPMENT DIMENSIONS AND LOCATIONS BEFORE BEGINNING ROUGH–IN. CONSULT ALL APPLICABLE CONTRACT DRAWINGS AND SHOP DRAWINGS TO ENSURE NEC CODE CLEARANCE REQUIRED AROUND ALL ELECTRICAL EQUIPMENT.
2. CONTRACTOR SHALL VERIFY ALL ELECTRICAL LOADS (VOLTAGE, PHASE, CONNECTION REQUIREMENTS, ETC.) OF EQUIPMENT FURNISHED BEFORE BEGINNING ROUGH–IN.
3. SEE APPLICABLE SHOP DRAWINGS FOR ROUGH–IN LOCATION OF ALL EQUIPMENT, WIRING DEVICES, ETC.
4. THE ELECTRICAL CONTRACTOR SHALL NOTIFY AND COOPERATE WITH THE MECHANICAL CONTRACTOR SUCH THAT NO PIPING, OR EQUIPMENT FOREIGN TO THE OPERATION OF THE ELECTRICAL EQUIPMENT SHALL BE PERMITTED TO BE INSTALLED IN, ENTER OR PASS THROUGH ELECTRICAL ROOMS OR SPACES; OR ABOVE OR BELOW ELECTRICAL EQUIPMENT IN THE OTHER AREAS.
5. ALL PENETRATIONS OF FLOORS, WALLS AND CEILINGS SHALL BE SEALED WITH APPROVED MATERIAL.
6. FOR PACKAGE EQUIPMENT PROVIDED ON THE PROJECT, SOME CONDUITS AND WIRES ARE SHOWN ON THE DRAWINGS, BUT IT IS EXPECTED THAT SOME ADDITIONAL CONDUITS AND WIRES MAY BE REQUIRED BY EQUIPMENT MANUFACTURERS TO COMPLETE INSTALLATION. IT IS INCUMBENT UPON THE GENERAL CONTRACTOR TO COORDINATE THIS REQUIREMENT WITH HIS SUBCONTRACTORS TO MAKE SURE THAT EQUIPMENT SUPPLIER PROVIDED ALL NECESSARY ELECTRICAL INFORMATION TO ELECTRICAL SUBCONTRACTOR FOR INCLUSION WHETHER SHOWN OR NOT SHOWN ON THE DRAWINGS.
7. IF OTHER THAN FIRST NAMED EQUIPMENT IS USED, IT SHALL BE CAREFULLY CHECKED FOR ELECTRICAL REQUIREMENTS AND CONTROL REQUIREMENTS OF ALTERNATE EQUIPMENT. SHOULD CHANGES OR ADDITIONS OCCUR IN ELECTRICAL WORK, OR THE WORK OF OTHER CONTRACTORS BE REVISED BY THE ALTERNATE EQUIPMENT, THE COST OF ALL CHANGES SHALL BE BORNE BY THE ELECTRICAL CONTRACTOR.

REGISTERED PROFESSIONAL ENGINEER No. 86-171214-2202 KEITH B. HEGERHORST 1/25/2019 STATE OF UTAH

FILE NAME:
FILE DATE:

HANSEN ALLEN & LUCE inc. ENGINEERS

PROJECT ENGINEER

DESIGNED KBH	3				
DRAFTED DAS	2				
CHECKED KBH	1				
DATE JANUARY 2019	NO.	DATE	REVISIONS	BY	APVD.

SCALE: AS SHOWN

springville PUBLIC WORKS

50 SOUTH MAIN
SPRINGVILLE, UTAH
84663

400 SOUTH WELL–NO. 2 WELL HOUSE
ELECTRICAL
LEGEND

SHEET NO. E1.0

260–44–200

6/01

CONDUIT/CONDUCTOR SCHEDULE
THHN, THWN, THWN-2

AMP RATING	DRAWING ID TAG.	CONDUCTOR QTY.*	CONDUCTOR SIZE	MIN. CONDUIT SIZE SIZE	MIN. CONDUIT SIZE EXCEPTIONS
20	212	2	#12	3/4"	
	312	3		3/4"	
	412	4		3/4"	
30	20	2	#10	3/4"	
	30	3		3/4"	
	40	4		3/4"	
50	28	2	#8	3/4"	
	38	3		3/4"	
	48	4		3/4"	
65	26	2	#6	3/4"	
	36	3		3/4"	
	46	4		3/4"	1"(C9)
85	24	2	#4	3/4"	1"(C2,C9)
	34	3		1"	3/4"(C4),1-1/4"(C9)
	44	4		1"	1-1/4"(C9)
115	22	2	#2	1"	
	32	3		1"	1-1/4"(C9)
	42	4		1-1/4"	
130	21	2	#1	1-1/4"	1"(C3,C4)
	31	3		1-1/4"	1"(C3)
	41	4		1-1/4"	1-1/2"(C2,C9,C10)
150	210	2	1/0	1-1/4"	
	310	3		1-1/4"	1-1/2"(C3,C9)
	410	4		1-1/2"	2"(C9)
175	220	2	2/0	1-1/4"	1-1/2"(C3,C4,C9)
	320	3		1-1/2"	
	420	4		2"	
200	230	2	3/0	1-1/2"	1-1/4(C4)
	330	3		1-1/2"	2"(C3,C9)
	430	4		2"	
230	240	2	4/0	1-1/2"	2"(C3)
	340	3		2"	
	440	4		2"	2-1/2"(C9)
255	225	2	250 KCMIL	2"	1-1/2"(C4)
	325	3		2"	2-1/2"(C1,C8)
	425	4		2-1/2"	2"(C4)
310	235	2	350 KCMIL	2"	2-1/2"(C9)
	335	3		2-1/2"	2"(C4)
	435	4		3"	2-1/2"(C1,C4)
380	250	2	500 KCMIL	2-1/2"	2"(C4)
	350	3		3"	2-1/2"(C1,C4)
	450	4		3"	3-1/2"(C9)
475	275	2	750 KCMIL	3"	
	375	3		3-1/2"	3"(C1,C7,C8)
	475	4		4"	3-1/2"(C1,C4,C8)

* CONDUCTOR QUANTITY DOES NOT INCLUDE GROUNDING CONDUCTORS. SEE EQUIPMENT GROUNDING CONDUCTORS FOR WIRE SIZES.

WHERE: C1 = ELECTRICAL METALLIC TUBING
C2 = ELECTRICAL NON-METALLIC TUBING
C3 = FLEXIBLE STEEL CONDUIT
C4 = INTERMEDIATE METALLIC CONDUIT
C7 = LIQUIDTIGHT FLEXIBLE METAL CONDUIT
C8 = RIGID METALLIC CONDUIT
C9 = PVC SCHEDULE 80 CONDUIT
C10 = PVC SCHEDULE 40 CONDUIT

GROUNDING ELECTRODE CONDUCTOR SERVICE ENTRANCE OR SEPARATELY DERIVED SYSTEM

COPPER CONDUCTOR	WIRE SIZE
#2 OR SMALLER	#8
1 OR 1/0	#6
2/0 OR 3/0	#4
>3/0 THRU 350 KCMIL	#2
>350 KCMIL THRU 600 KCMIL	1/0

ABBREVIATIONS

A	AMPERES, AMMETER
AC	ALTERNATING CURRENT
ACC	AREA CONTROL CENTER
AF	AMPERE FRAME
AFD	ADJUSTABLE FREQUENCY DRIVE
AFF	ABOVE FINISHED FLOOR
AHAP	AS HIGH AS POSSIBLE
AIC	AMPERES INTERRUPTING CAPACITY
AL	ALUMINUM
AR	ALARM RELAY
ARV	AUTO TRANSFORMER REDUCED VOLTAGE STARTER
AS	AMMETER SELECTOR SWITCH
ASYM	ASYMMETRICAL
AT	AMPERE TRIP
ATS	AUTOMATIC TRANSFER SWITCH
AUTO	AUTOMATIC
AUX	AUXILIARY
AWG	AMERICAN WIRE GAUGE
AV	AUDIO VISUAL
BC	BARE COPPER CONDUCTOR
BKR	BREAKER
BLDG	BUILDING
BOT	BOTTOM
BTD	BEARING TEMPERATURE DETECTOR
C	CONDUIT
CB	CIRCUIT BREAKER
CDR	CONDUCTOR
CHS	COMMUNICATIONS HAND STATION
CKT	CIRCUIT
CLG	CEILING
CNTD	CONTINUED
CO	CONVENIENCE OUTLET
C.O.	CONDUIT ONLY, SPARE
COMPR	COMPRESSOR
COMPT	COMPARTMENTS
CONC	CONCRETE
CPT	CONTROL POWER TRANSFORMER
CR	CONTROL RELAY
CT	CURRENT TRANSFORMER
CU	COPPER
DB	DIRECT BURIAL, DUCT BANK
DC	DIRECT CURRENT
DCU	DISTRIBUTED CONTROL UNIT
DET	DETAIL
DIAG	DIAGRAM
DISC	DISCONNECT
DS	DISCONNECT SWITCH
DWG	DRAWING
E	EXISTING
EA	EACH
ECP	EQUIPMENT CONTROL PANEL
EL	ELEVATION
ELEC	ELECTRIC(AL)
EM	EMERGENCY
ENCL	ENCLOSURE
EPI	EMERGENCY POWER INTERLOCK
EQUIP	EQUIPMENT
ETM	ELAPSED TIME METER
EXH	EXHAUST
EXP	EXPLOSION PROOF
F.C.	FAIL CLOSE
FDR	FEEDER
FIN	FINISHED
FL	FLUORESCENT
FLA	FULL LOAD AMPS
FLEX	FLEXIBLE
FO	FIBER OPTIC
F.O.	FAIL OPEN
FS	FLOW SWITCH
FUT	FUTURE
FVNR	FULL VOLTAGE NON REVERSING
FVR	FULL VOLTAGE REVERSING

G	GREEN GROUND CONDUCTOR
GALV	GALVANIZED
GEN	GENERATOR
GFCI	GROUND FAULT CIRCUIT INTERRUPTER
GFR	GROUND FAULT RELAY
GND, G	GROUND
H/A	HAND/AUTO
HH	HAND HOLE
HID	HIGH INTENSITY DISCHARGE
HOA	HAND/OFF/AUTO
HP	HORSEPOWER
HPS	HIGH PRESSURE SODIUM
HT	HEIGHT
HTR	HEATER
HV	HIGH VOLTAGE (GENERALLY ABOVE 600V)
HVAC	HEATING, VENTILATION AND AIR CONDITIONING
HZ	HERTZ (CYCLES PER SECOND)
I/O	INPUT/OUTPUT
IL	INDICATION LAMP
INCAN	INCANDESCENT
INST	INSTANTANEOUS
INSTR	INSTRUMENT
INTLK	INTERLOCK
JB	JUNCTION BOX
KV	KILOVOLT
KVA	KILOVOLT-AMPERE
KW	KILOWATT
KWH	KILOWATT HOUR
LC	LIGHTING CONTACTOR
LCP	LOCAL CONTROL PANEL
LDS	LEVEL DIFFERENTIAL SWITCH
LO	LUGS ONLY
LOS	LOCI-OUT STOP
LP	LIGHTING PANEL
LS	LEVEL SWITCH
LTG	LIGHTING
LV	LOW VOLTAGE (GENERALY BELOW 600V)
M	MOTOR, MOTOR CONTACTOR
MA	MILLIAMPERE
MAX	MAXIMUM
MBS	MANUAL BYPASS SWITCH
MCC	MOTOR CONTROL CENTER
MCM	THOUSAND CIRCULAR MILLS
MCP	MAIN CONTROL PANEL, MAGNETIC CIRCUIT PROTECTOR
MFR	MANUFACTURER
MH	MANHOLE
MIC	MICROPHONE
MIN	MINIMUM
MIS	MANAGEMENT INFORMATION STATION
MISC	MISCELLANEOUS
MOV	MOTOR OPERATED VALVE
MR	MOTOR CONTACTOR RELAY
MSB	MAIN SWITCHBOARD
MTD	MOUNTED
MTG HT	MOUNTING HEIGHT
MTS	MANUAL TRANSFER SWITCH
MV	MILLIVOLT
N	NEW
N/A	NOT APPLICABLE
NA	NON-AUTOMATIC
NC	NORMALLY CLOSED
NF	NON FUSED
NIC	NOT IN CONTRACT
NO	NORMALLY OPEN
NOM	NOMINAL
NP	NAMEPLATE
NS	TORQUE SWITCH
NTS	NOT TO SCALE

OC	ON CENTER, OVERCURRENT
OH	OVERHEAD
OL'S	OVERLOADS
P	POLE, PHASE
PA	PUBLIC ACCESS
PB	PULLBOX, PUSH BUTTON
PDS	PRESSURE DIFFERENTIAL SWITCH
PF	POWER FACTOR
PH	PHASE
PLC	PROGRAMMABLE LOGIC CONTROLLER
PNL	PANEL
PP	POWER PANEL
PR	PAIR
PRI	PRIMARY
PROVIDE	FURNISH, INSTALL AND CONNECT
PSH/L	PRESSURE SWITCH, HIGH/LOW
PT	POTENTIAL TRANSFORMER
PVC	POLYVINYL CHLORIDE
PW	PART WINDING
PWR	POWER
RECP	RECEPTACLE
REQD	REQUIRED
RGS	RIGID GALVANIZED STEEL CONDUIT
RMS	ROOT MEAN SQUARE
RTD	RESISTANCE TEMPERATURE DETECTOR
RTU	REMOTE TERMINAL UNIT
RVNR	REDUCED VOLTAGE NON-REVERSING
SCH	SCHEDULE
SEC	SECONDARY, SECONDS
SEL	SELECTOR
SH	SHIELDED
SPEC	SPECIFICATIONS
SPD	SURGE PROTECTION DEVICE
SPDT	SINGLE POLE DOUBLE THROW
SPKR	SPEAKER
SPST	SINGLE POLE SINGLE THROW
SS	STAINLESS STEEL, SPEED SWITCH
S/S	SELECTOR SWITCH
SUB	SUBSTATION
SV	SOLENOID VALVE
SW	SWITCH
SWBD	SWITCHBOARD
SWGR	SWITCHGEAR
T1	TRANSFORMER NO. 1
TACH	TACHOMETER
TB	TERMINAL BLOCK
TC	TIME CLOCK, TIME CONTROLLER
TDAD	TIME DELAY AFTER DE-ENERGIZATION (OFF-DELAY)
TDAE	TIME DELAY AFTER ENERGIZATION (ON-DELAY)
TEL	TELEPHONE
TEMP	TEMPERATURE
TR	TIME DELAY RELAY
TS	TEMPERATURE SWITCH
TVSS	TELEVISION
TV	TRANSIENT VOLTAGE SURGE SUPPRESSER
TYP	TYPICAL
UG	UNDERGROUND
UON	UNLESS OTHERWISE NOTED
UPS	UNINTERRUPTIBLE POWER SUPPLY
US	UNSWITCHED
V	VOLTMETER
VA	VOLT-AMP
VC	VACUUM CONTACTOR
VS	VOLTMETER SELECTOR SWITCH
	VIBRATION SWITCH
W	WATT, WIRE
W/	WITH
WM	WATTMETER
W/O	WITHOUT
WP	WEATHERPROOF
WTD	WINDING TEMPERATURE DETECTOR
XFMR	TRANSFORMER
ZS	POSITION (LIMIT) SWITCH

NOT ALL ABBREVIATIONS MAY BE USED ON THIS SET OF DRAWINGS.

EQUIPMENT GROUNDING CONDUCTORS

FUSE OR CB SIZE	SIZE (COPPER)
15	14
20	12
30	10
40	10
60	10
100	8
200	6
300	4
400	3
500	2
600	1
800	1/0
1000	2/0
1200	3/0
1600	4/0
2000	250
2500	350

H.P.E. INC. ELECTRICAL ENGINEERS
POWER SYSTEMS, CONTROL & INSTRUMENTATION SYSTEMS
HEGERHORST POWER ENGINEERING INCORPORATED (801) 642-2051
708 EAST 50 SOUTH FAX (801) 642-2154
AMERICAN FORK, UT 84003
HPE PROJECT 18106

© 2019
FOR INFORMATION ABOUT THIS JOB, PLEASE CONTACT: KEITH HEGERHORST

GENERAL NOTES:

1. NOT USED.

SHEET KEYNOTES:

1. NOT USED.

SPRINGVILLE WELL TAG LIST

HVAC EQUIPMENT

TAG	DESCRIPTION	LOCATION	SUPPLIED BY	INSTALLED BY
AH.1	AIR HANDLER	PUMP ROOM	CONTRACTOR	CONTRACTOR
BBH.1	BASEBOARD HEATER	CHLORINE ROOM	CONTRACTOR	CONTRACTOR
EF-1	EXHAUST FAN	CHLORINE ROOM	CONTRACTOR	CONTRACTOR
UH.1	UNIT HEATER NO. 1	PUMP ROOM	CONTRACTOR	CONTRACTOR
UH.2	UNIT HEATER NO. 2	PUMP ROOM	CONTRACTOR	CONTRACTOR
VFD.2	AIR HANDLER VFD	PUMP ROOM	CONTRACTOR	CONTRACTOR

PUMP AND EQUIPMENT

TAG	DESCRIPTION	LOCATION	SUPPLIED BY	INSTALLED BY
AE-1	CHLORINE GAS SENSOR	CHLORINE ROOM	CONTRACTOR	CONTRACTOR
ASH-1	CHLORINE LEAK ALARM	PUMP ROOM	CONTRACTOR	CONTRACTOR
CP-1	MAIN CONTROL PANEL	PUMP ROOM	CONTRACTOR	CONTRACTOR
CP-2	EXHAUST FAN CONTROL PANEL	PUMP ROOM	CONTRACTOR	CONTRACTOR
CP-3	PUMP CONTROL PANEL	PUMP ROOM	CONTRACTOR	CONTRACTOR
P-1	WELL PUMP	PUMP ROOM	CONTRACTOR	CONTRACTOR
RTU	REMOTE TELEMETRY UNIT	PUMP ROOM	OWNER	OWNER
VFD-1	WELL VFD	PUMP ROOM	CONTRACTOR	CONTRACTOR

SWITCHES

TAG	DESCRIPTION	LOCATION	SUPPLIED BY	INSTALLED BY
LSH-1	FLOOR LEVEL SWITCH	PUMP ROOM	CONTRACTOR	CONTRACTOR
PSH-1	WELL HIGH DISCHARGE PRESSURE SWITCH	PUMP ROOM	CONTRACTOR	CONTRACTOR
VS-1	MOTOR HIGH VIBRATION SWITCH	PUMP ROOM	OWNER	CONTRACTOR
ZS-1A	DOOR POSITION SWITCH	PUMP ROOM	CONTRACTOR	CONTRACTOR
ZS-1B	DOOR POSITION SWITCH	PUMP ROOM	CONTRACTOR	CONTRACTOR
ZS-2A	DOOR POSITION SWITCH	PUMP ROOM	CONTRACTOR	CONTRACTOR
ZS-2B	DOOR POSITION SWITCH	PUMP ROOM	CONTRACTOR	CONTRACTOR
ZS-3	DOOR POSITION SWITCH	CHLORINE ROOM	CONTRACTOR	CONTRACTOR
ZS-4	HATCH POSITION SWITCH	PUMP ROOM	CONTRACTOR	CONTRACTOR
ZS-5A	WASTE VALVE POSITION SWITCH	PUMP ROOM	CONTRACTOR	CONTRACTOR
ZS-5B	WASTE VALVE POSITION SWITCH	PUMP ROOM	CONTRACTOR	CONTRACTOR
ZS-6	SURGE VALVE OPEN	PUMP ROOM	CONTRACTOR	CONTRACTOR

INSTRUMENTS

TAG	DESCRIPTION	LOCATION	SUPPLIED BY	INSTALLED BY
FE-1	FLOW METER	PUMP ROOM	CONTRACTOR	CONTRACTOR
FIT-1	FLOW INDICATOR/TRANSMITTER	PUMP ROOM	CONTRACTOR	CONTRACTOR
LT-1	WELL WATER LEVEL	PUMP ROOM	CONTRACTOR	CONTRACTOR
PT-1	STATION DISCHARGE PRESSURE	PUMP ROOM	CONTRACTOR	CONTRACTOR
WE/WIT-1A/1B	DUAL TANK CHLORINE SCALE	CHLORINE ROOM	CONTRACTOR	CONTRACTOR

VALVES

TAG	DESCRIPTION	LOCATION	SUPPLIED BY	INSTALLED BY
SV-1	WELL PRE-LUBE SOLENOID VALVE	PUMP ROOM	CONTRACTOR	CONTRACTOR
V-1	WELL WASTE VALVE	CHLORINE ROOM	CONTRACTOR	CONTRACTOR
V-2	CHLORINE PROPORTIONING VALVE	CHLORINE ROOM	CONTRACTOR	CONTRACTOR
V-3	SURGE ANTICIPATOR VALVE	PUMP ROOM	CONTRACTOR	CONTRACTOR

REGISTERED PROFESSIONAL ENGINEER No. 86-171214-2202 KEITH B. HEGERHORST 1/25/2019 STATE OF UTAH

FILE NAME:
FILE DATE:

HANSEN ALLEN & LUCE inc. ENGINEERS

PROJECT ENGINEER

DESIGNED	KBH	3		
DRAFTED	DAS	2		
CHECKED	KBH	1		
DATE	JANUARY 2019	NO.	DATE	REVISIONS

BY | APVD.

SCALE: AS SHOWN

springville PUBLIC WORKS

50 SOUTH MAIN
SPRINGVILLE, UTAH
84663

400 SOUTH WELL-NO. 2 WELL HOUSE
ELECTRICAL
ABBREVIATIONS AND TABLES

SHEET NO. E1.1

260-44-200

6/01

H.P.E. INC. ELECTRICAL ENGINEERS
POWER SYSTEMS, CONTROL & INSTRUMENTATION SYSTEMS
HEGERHORST POWER ENGINEERING INCORPORATED (801) 642-2051
708 EAST 50 SOUTH FAX (801) 642-2154
AMERICAN FORK, UT 84003
HPE PROJECT 18106
© 2019
FOR INFORMATION ABOUT THIS JOB, PLEASE CONTACT: KEITH HEGERHORST

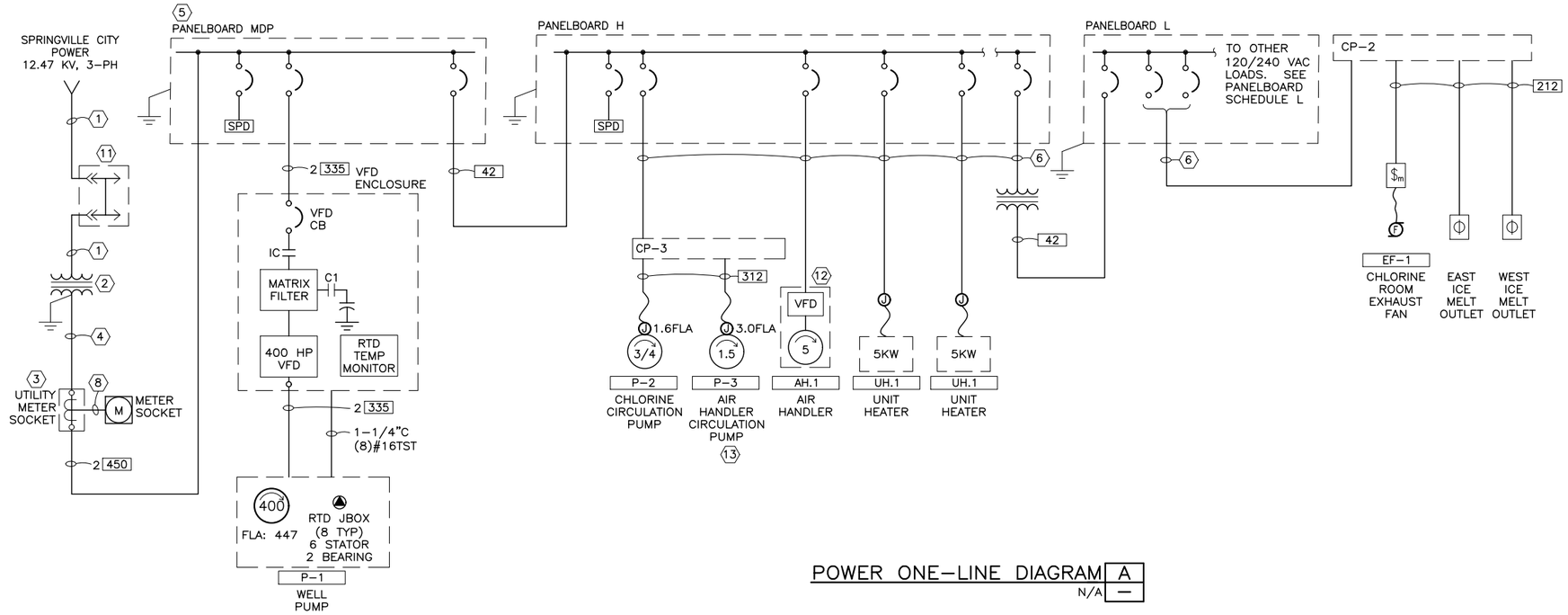

POWER ONE-LINE DIAGRAM A
N/A —

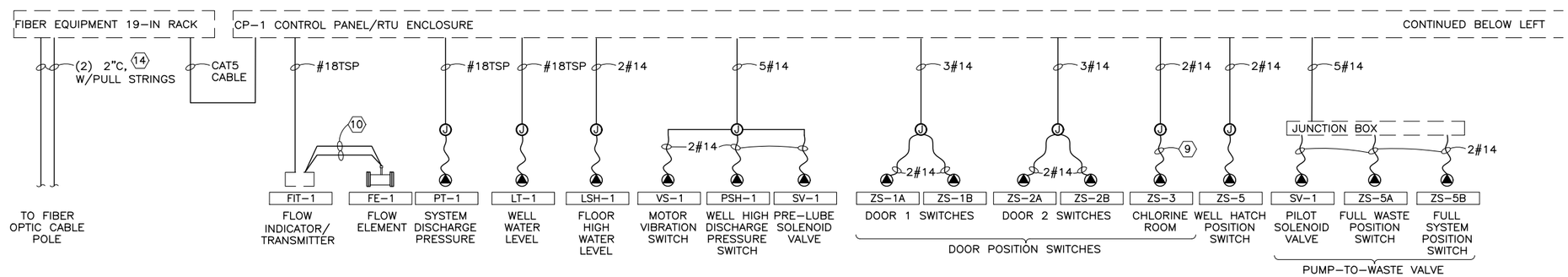

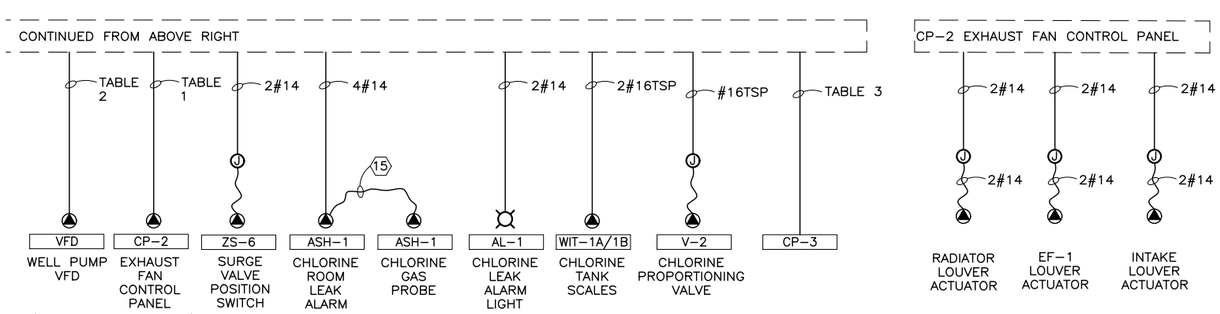

INSTR. AND CONTROL ONE-LINE DIAGRAM B
N/A —

GENERAL NOTES:

1. REFER TO ELECTRICAL PLANS FOR EQUIPMENT LOCATIONS.
2. ALL WORKMANSHIP AND MATERIALS SHALL BE DONE AS REQUIRED BY SPRINGVILLE CITY POWER. REFER TO SPRINGVILLE CITY ELECTRICAL REQUIREMENTS & STANDARD MANUAL ON-LINE FOR DETAILS.
3.

SHEET KEYNOTES:

1. PRIMARY CONDUIT: 4"C, CONDUIT INSTALLED BY CONTRACTOR. CONDUCTOR INSTALLED BY UTILITY COMPANY. CONTRACTOR SHALL INSTALL CONDUIT 10-FT UP EXISTING POLE.
2. UTILITY TRANSFORMER. PAD CONSTRUCTED BY CONTRACTOR AS REQUIRED BY UTILITY COMPANY. TRANSFORMER SUPPLIED AND INSTALLED BY UTILITY COMPANY.
3. CURRENT TRANSFORMER (CT) METERING ENCLOSURE: PROVIDED AND INSTALLED BY CONTRACTOR, AS REQUIRED BY UTILITY COMPANY.
4. TWO 4" CONDUITS PROVIDED AND INSTALLED BY CONTRACTOR. CONDUCTOR SUPPLIED AND INSTALLED BY UTILITY COMPANY.
5. 1"C PROVIDED AND INSTALLED BY CONTRACTOR. CONDUCTORS PROVIDED AND INSTALLED BY POWER COMPANY.
6. METER SOCKET: PROVIDED AND INSTALLED BY CONTRACTOR AS REQUIRED BY UTILITY COMPANY.
7. REFER TO PANELBOARD SCHEDULES FOR PANELBOARD AND WIRE/CONDUIT INFORMATION.
8. LOW VOLTAGE TRANSFORMER: 7.5 KVA, 480 VAC PRIMARY, 120/240 VAC SECONDARY.
9. CABLE SUPPLIED WITH SWITCH.
10. FLOW ELEMENT SIGNAL AND DATA CABLES. CONTRACTOR SHALL INSTALL TWO CONDUITS FROM FLOW TUBE TO INDICATOR/TRANSMITTER. CONDUIT SIZE DETERMINED BY METER CONDUCTORS.
11. SECTIONALIZING CABINET: PROVIDED BY SPRINGVILLE CITY POWER, INSTALLED BY CONTRACTOR AT BASE OF QUONSET BUILDING POLE.
12. VFD SUPPLIED WITH AIR HANDLER. INSTALLED BY MECH. CONTRACTOR.
13. AIR HANDLER CIRCULATION PUMP: E.C. TO PROVIDE STARTER AND BRANCH CIRCUIT. M.C. SHALL PROVIDE AND INSTALL ALL CONTROLS.
14. PROVIDE LONG SWEEP ELBOWS.
15. CHLORINE GAS SENSOR AND CABLE SUPPLIED WITH AH-1. INSTALL IN CHLORINE ROOM.

TABLE 1

CONDUIT SIZE	CONDUCTOR QTY	CONDUCTOR SIZE	SIGNAL DESCRIPTION
3/4"	2	#14	EX. FAN CALL RUN
	1	#14	COMMON
	1	#14	EX FAN ON
	1	#14	EX. FAN HOA IN HAND
	1	#14	EX. FAN HOA IN AUTO
	4	#14	SPARE

TABLE 2

CONDUIT SIZE	CONDUCTOR QTY	CONDUCTOR SIZE	SIGNAL DESCRIPTION
3/4"	2	#14	VFD CALL RUN
	1	#14	VFD SHUTDOWN
	2	#14	VFD ON
	1	#14	VFD FAULT
	1	#14	HIGH TEMPERATURE
	1	#14	VFD HOA IN HAND
	1	#14	VFD HOA IN AUTO
	2	#14	SPARE
3/4"C	1	#16TSP	VFD RUNNING SPEED
	1	#16TSP	VFD COMMAND SPEED
3/4"C	1	BELDEN 9842	RS485 FOR RTD TEMPERATURES
3/4"C	-	-	PULL STRING (SPARE)

TABLE 3

CONDUIT SIZE	CONDUCTOR QTY	CONDUCTOR SIZE	SIGNAL DESCRIPTION
3/4"	2	#14	CHL. CIRC. PUMP HOA IN HAND
	1	#14	CHL. CIRC. PUMP HOA IN AUTO
	1	#14	AH-1 CIRC. PUMP HOA IN HAND
	1	#14	AH-1 CIRC. PUMP HOA IN AUTO
	1	#14	CHL. CIRC. PUMP ON
	1	#14	AH-1 CIRC. PUMP ON
	2	#14	CHL. CIRC. PUMP RUN
	4	#14	SPARE

REGISTERED PROFESSIONAL ENGINEER No. 86-171214-2202 KEITH B. HEGERHORST 1/25/2019 STATE OF UTAH

FILE NAME:
FILE DATE:

HANSEN ALLEN & LUCE inc. ENGINEERS

PROJECT ENGINEER

DESIGNED KBH	3			
DRAFTED DAS	2			
CHECKED KBH	1			
DATE JANUARY 2019	NO.	DATE	REVISIONS	BY / APVD.

SCALE AS SHOWN

springville PUBLIC WORKS

50 SOUTH MAIN
SPRINGVILLE, UTAH
84663

400 SOUTH WELL-NO. 2 WELL HOUSE
ELECTRICAL
ONE-LINE DIAGRAMS

SHEET NO. E2.0

260-44-200

6/01

H.P.E. INC. ELECTRICAL ENGINEERS
POWER SYSTEMS, CONTROL & INSTRUMENTATION SYSTEMS
HEGERHORST POWER ENGINEERING INCORPORATED (801) 642-2051
708 EAST 50 SOUTH FAX (801) 642-2154
AMERICAN FORK, UT 84003
HPE PROJECT 18106
© 2019
FOR INFORMATION ABOUT THIS JOB, PLEASE CONTACT: KEITH HEGERHORST

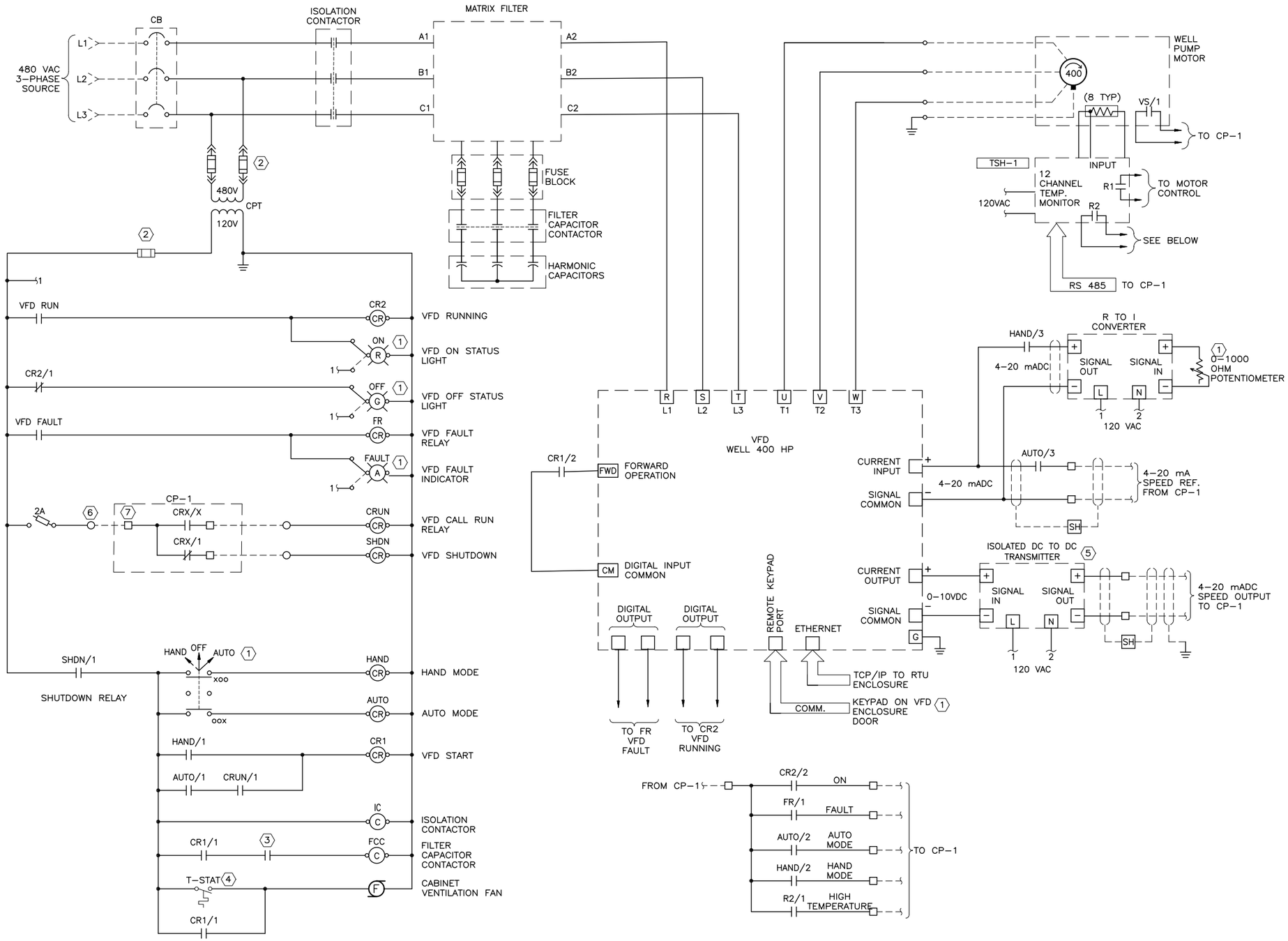

TYPICAL VFD CONTROL DIAGRAM A

GENERAL NOTES:

1. CONTROL WIRING DIAGRAM SHOWN IS CONCEPTUAL AND SHALL BE MODIFIED AS REQUIRED FOR THE SPECIFIC VFD SUPPLIED.
2.

SHEET KEYNOTES:

1. INSTALL DEVICE ON ENCLOSURE DOOR AND ACCESSIBLE TO OPERATOR.
2. FUSES SIZED BY VFD SUPPLIER.
3. FILTER CAPACITORS SHALL BE DE-ENERGIZED WHEN VFD IS OPERATING LESS THAN 30% OUTPUT HERTZ.
4. VFD CIRCULATION FAN SHALL BE THERMOSTATICALLY CONTROLLED AND RUN WHEN VFD IS RUNNING.
5. PROVIDE SIGNAL CONVERTER AS REQUIRED.
6. TERMINAL IN VFD ENCLOSURE
7. TERMINAL IN CP-1 ENCLOSURE,

REGISTERED PROFESSIONAL ENGINEER No. 86-171214-2202 KEITH B. HEGERHORST 1/25/2019 STATE OF UTAH

FILE NAME:
FILE DATE:

HANSEN ALLEN & LUCE ENGINEERS	PROJECT ENGINEER	DESIGNED KBH	3				
		DRAFTED DAS	2				
		CHECKED KBH	1				
		DATE JANUARY 2019	NO.	DATE	REVISIONS	BY	APVD.

SCALE: AS SHOWN

springville PUBLIC WORKS

50 SOUTH MAIN
SPRINGVILLE, UTAH
84663

400 SOUTH WELL-NO. 2 WELL HOUSE
ELECTRICAL
VFD WIRING DIAGRAM

SHEET NO. E2.1

260-44-200

6/01

H.P.E. INC. ELECTRICAL ENGINEERS
POWER SYSTEMS, CONTROL & INSTRUMENTATION SYSTEMS
HEGERHORST POWER ENGINEERING INCORPORATED (801) 642-2051
708 EAST 50 SOUTH FAX (801) 642-2154
AMERICAN FORK, UT 84003
HPE PROJECT 18106 © 2019
FOR INFORMATION ABOUT THIS JOB, PLEASE CONTACT: KEITH HEGERHORST

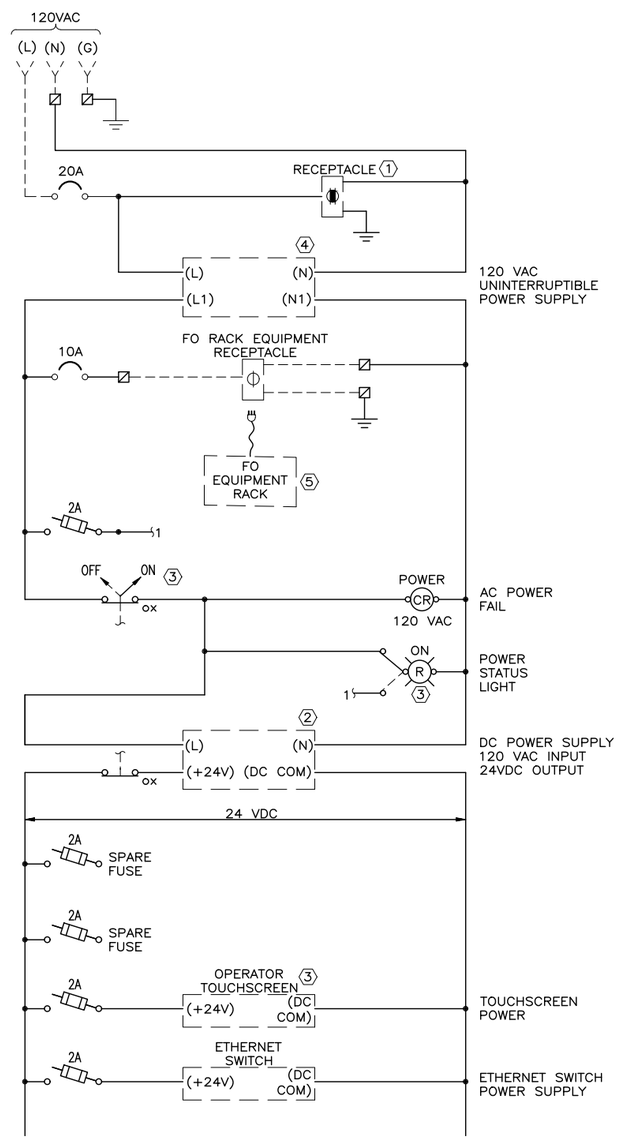

POWER LOGIC A

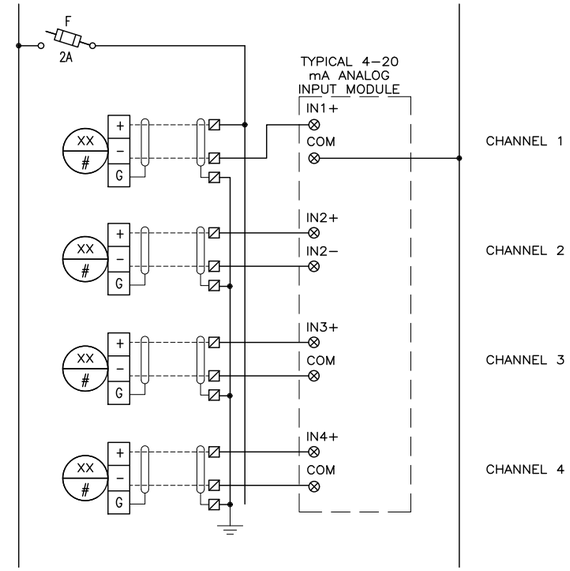

ANALOG INPUT MODULE D

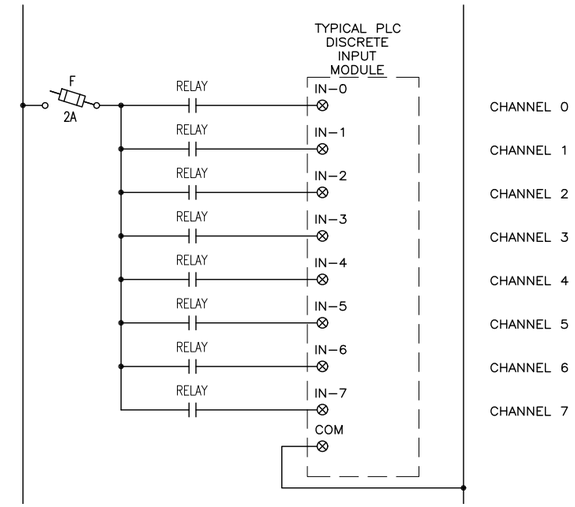

DISCRETE INPUT MODULE C

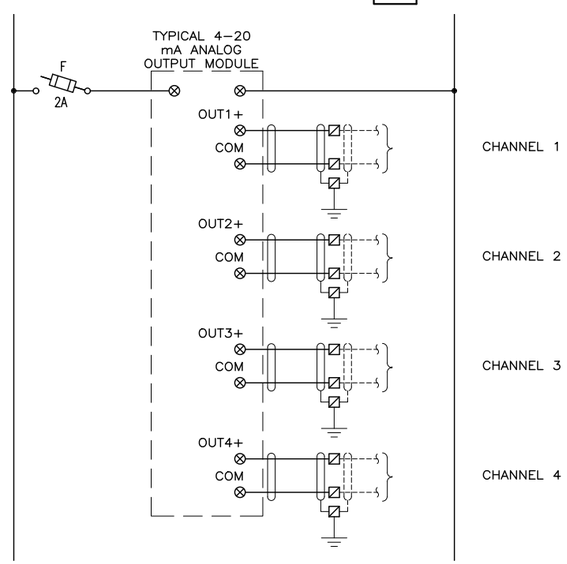

ANALOG OUTPUT MODULE C

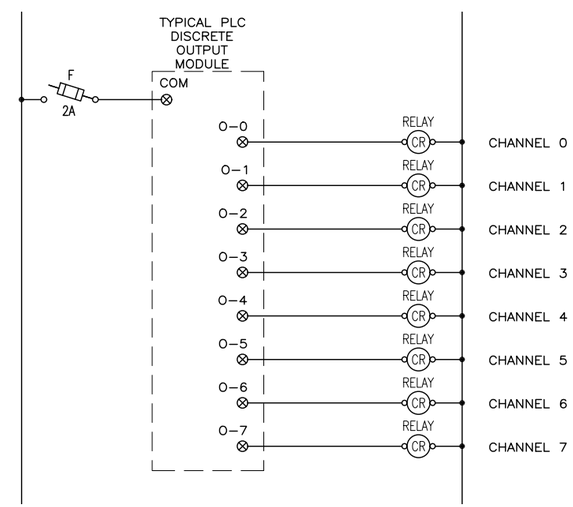

DISCRETE OUTPUT MODULE B

GENERAL NOTES:

1. THIS DIAGRAM IS TYPICAL AND INDICATES THE BASIC CONTROL PANEL CONTROL DIAGRAM. THE CONTRACTOR SHALL MODIFY AS REQUIRED FOR THE DEVICES AND PLC MODULES USED.
2. CONTRACTOR SHALL PREPARE A CONTROL DIAGRAM BASED ON THE DEVICES SUPPLIED, INCLUDING WIRE, FUSE AND TERMINAL NUMBERS AS REQUIRED. THE PLC I/O SHOWN IS GENERIC.

SHEET KEYNOTES:

1. PROVIDE A DUPLEX GFCI RECEPTACLE IN THE ENCLOSURE.
2. PROVIDE A 120VAC:24VDC POWER SUPPLY/BATTERY CHARGER COMPLETE WITH BATTERY CAPACITY TO PROVIDE 2 HOURS OF PANEL OPERATION UPON THE LOSS OF UTILITY POWER.
3. DEVICE SHALL BE INSTALLED IN THE ENCLOSURE DOOR AND AVAILABLE TO THE OPERATOR.
4. SIZE UPS TO HANDLE CP-1 LOADS PLUS FIBER OPTIC RACK LOADS.
5. FO EQUIPMENT RACK SHALL INCLUDE: SCHWEITZER SEL-2730M (MANAGED 24-PORT ETHERNET SWITCH) AND 8130-04 1000 BASE-LX (GIGABIT ETHERNET DUAL-FIBER SFP TRANSCEIVER)

REGISTERED PROFESSIONAL ENGINEER
No. 86-171214-2202
KEITH B. HEGERHORST
1/25/2019
STATE OF UTAH

FILE NAME:
FILE DATE:

HANSEN ALLEN & LUCE inc ENGINEERS

PROJECT ENGINEER

DESIGNED	KBH	3			
DRAFTED	DAS	2			
CHECKED	KBH	1			
DATE	JANUARY 2019	NO.	DATE	REVISIONS	BY / APVD.

SCALE: AS SHOWN

springville PUBLIC WORKS

50 SOUTH MAIN
SPRINGVILLE, UTAH
84663

400 SOUTH WELL-NO. 2 WELL HOUSE
ELECTRICAL
CP-1 TYPICAL WIRING DIAGRAM, SHT. 1

SHEET NO. E2.2

260-44-200

6/01

NOTES:

1. CONTRACTOR SHALL ASSIGN FUSE, RELAY, TERMINAL AND WIRE NUMBERS AS REQUIRED.
2. CONTRACTOR MAY COMBINE CONDUCTORS IN COMMON CONDUIT TO DEVICES IN SAME PROXIMITY.
3. PROVIDE AN INTERPOSING RELAY AND WIRE RELAY CONTACT TO PLC INPUT AS INDICATED.
4. CONTRACTOR SHALL ASSIGN PLC MODULE AND CHANNEL.

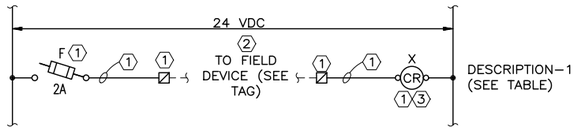

INTERPOSE RELAY LOGIC

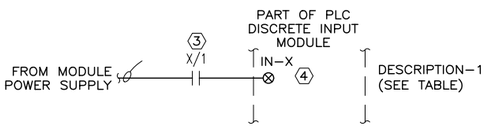

PLC DISCRETE INPUT LOGIC

PLC DISCRETE INPUT WIRING A

NOTES:

1. CONTRACTOR SHALL ASSIGN FUSE, RELAY, TERMINAL AND WIRE NUMBERS AS REQUIRED.
2. CONTRACTOR SHALL ASSIGN PLC MODULE AND CHANNEL.
3. PROVIDE AN INTERPOSING RELAY AND WIRE RELAY CONTACT TO PLC INPUT AS INDICATED.

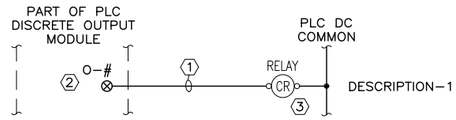

PLC DISCRETE OUTPUT LOGIC

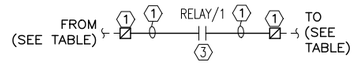

INTERPOSE RELAY LOGIC

PLC DISCRETE OUTPUT WIRING B

1' = 1'–0"

NOTES:

1. CONTRACTOR SHALL ASSIGN FUSE, RELAY, TERMINAL AND WIRE NUMBERS AS REQUIRED.
2. CONTRACTOR SHALL ASSIGN PLC MODULE AND CHANNEL.

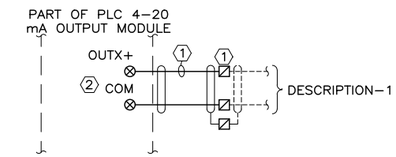

PLC ANALOG OUTPUT

PLC ANALOG OUTPUT WIRING C

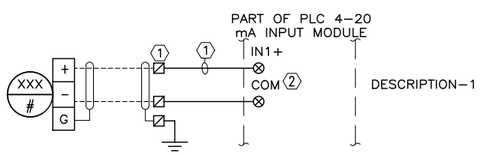

PLC ANALOG INPUT TYPE 1

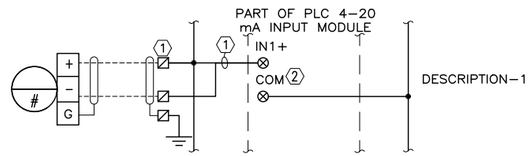

PLC ANALOG INPUT TYPE 2

PLC ANALOG INPUT WIRING D

CP-1 MAIN CONTROL PANEL I/O LIST

DISCRETE INPUTS		
DESCRIPTION	FROM DEVICE	TO DEVICE
CHLORINE ROOM DOOR OPEN	ZS-3	CP-1
CHLORINE ROOM EF-1 HOR IN HAND	CP-2	CP-1
CHLORINE ROOM EF-1 HOR IN REMOTE	CP-2	CP-1
CHLORINE ROOM EF-1 ON	CP-2	CP-1
CHLORINE LEAK ALARM	ASH-1	CP-1
MOTOR VIBRATION SWITCH	VS-1	CP-1
PUMP ROOM DOOR 1A OPEN	ZS-1A	CP-1
PUMP ROOM DOOR 1B OPEN	ZS-1B	CP-1
PUMP ROOM DOOR 2A OPEN	ZS-2A	CP-1
PUMP ROOM DOOR 2B OPEN	ZS-2B	CP-1
PUMP ROOM HIGH WATER ALARM	LSH-1	CP-1
SURGE VALVE OPEN	ZS-6	CP-1
WASTE VALVE IN SYSTEM POSITION	ZS-5B	CP-1
WASTE VALVE IN WASTE POSITION	ZS-5A	CP-1
WELL HIGH DISCHARGE PRESSURE	PSH-1	CP-1
WELL PUMP HATCH OPEN	ZS-4	CP-1
WELL PUMP HOR IN HAND	VFD	CP-1
WELL PUMP HOR IN REMOTE	VFD	CP-1
WELL PUMP ON	VFD	CP-1
WELL PUMP VFD FAULT	VFD	CP-1
MOTOR HIGH RTD TEMPERATURE	VFD	CP-1
DISCRETE OUTPUTS		
DESCRIPTION	FROM DEVICE	TO DEVICE
CHLORINE LEAK ALARM LIGHT ON	CP-1	AL-1
CHLORINE LEAK ALARM REMOTE RESET	CP-1	ASH-1
CHLORINE ROOM EF.1 RUN	CP-1	CP-2
VFD SHUTDOWN	CP-1	VFD
WASTE VALVE OPEN TO SYSTEM	CP-1	SV-3
WELL LUBE SOLENOID VALVE OPEN	CP-1	SV-1
WELL PUMP VFD RUN	CP-1	VFD
ANALOG INPUTS		
DESCRIPTION	FROM DEVICE	TO DEVICE
CHLORINE TANK NO. 1 WEIGHT	WIT-1A	CP-1
CHLORINE TANK NO. 2 WEIGHT	WIT-1B	CP-1
WELL DISCHARGE PRESSURE	PIT-1	CP-1
WELL LEVEL	LT-1	CP-1
WELL FLOW	FIT-1	CP-1
WELL PUMP VFD RUNNING SPEED	VFD	CP-1
ANALOG OUTPUTS		
DESCRIPTION	FROM DEVICE	TO DEVICE
CHLORINE DOSING RATE	CP-1	V-2
WELL PUMP COMMAND SPEED	CP-1	VFD

H.P.E. INC. ELECTRICAL ENGINEERS
POWER SYSTEMS, CONTROL & INSTRUMENTATION SYSTEMS
HEGERHORST POWER ENGINEERING INCORPORATED (801) 642-2051
708 EAST 50 SOUTH FAX (801) 642-2154
AMERICAN FORK, UT 84003
HPE PROJECT 18106

© 2019
FOR INFORMATION ABOUT THIS JOB, PLEASE CONTACT: KEITH HEGERHORST

GENERAL NOTES:

1. REFER TO E2.3 FOR GENERAL AND SHEET KEYNOTES.
2.

REGISTERED PROFESSIONAL ENGINEER No. 86-171214-2202 KEITH B. HEGERHORST 1/25/2019 STATE OF UTAH

FILE NAME:
FILE DATE:

HANSEN ALLEN & LUCE inc ENGINEERS

PROJECT ENGINEER

DESIGNED	KBH	3			
DRAFTED	DAS	2			
CHECKED	KBH	1			
DATE	JANUARY 2019	NO.	DATE	REVISIONS	BY / APVD.

SCALE: AS SHOWN

springville PUBLIC WORKS

50 SOUTH MAIN
SPRINGVILLE, UTAH
84663

400 SOUTH WELL–NO. 2 WELL HOUSE
ELECTRICAL
CP–1 TYPICAL WIRING DIAGRAM, SHT. 2

SHEET NO. E2.3

260–44–200

6/01

H.P.E. INC. ELECTRICAL ENGINEERS
POWER SYSTEMS, CONTROL & INSTRUMENTATION SYSTEMS
HEGERHORST POWER ENGINEERING INCORPORATED (801) 642-2051
708 EAST 50 SOUTH FAX (801) 642-2154
AMERICAN FORK, UT 84003
HPE PROJECT **18106**
© 2019
FOR INFORMATION ABOUT THIS JOB, PLEASE CONTACT: **KEITH HEGERHORST**

GENERAL NOTES:

1. CP-2 EXTERNAL ARRANGEMENT SHOWN ON E6.0.

SHEET KEYNOTES:

1. DEVICE INSTALLED ON CONTROL PANEL DOOR AND AVAILABLE TO OPERATOR.
2. PROVIDE LINE-VOLTAGE COOLING THERMOSTAT. INSTALL AS SHOWN ON PLANS.
3. COORDINATE WITH FAN SUPPLIER. FAN MAY BE SUPOPLIED WITH A BUILT-IN SELF-RESETTING OVERLOAD. SEPARATE OVERLOAD SHOWN MAY NOT BE REQUIRED.

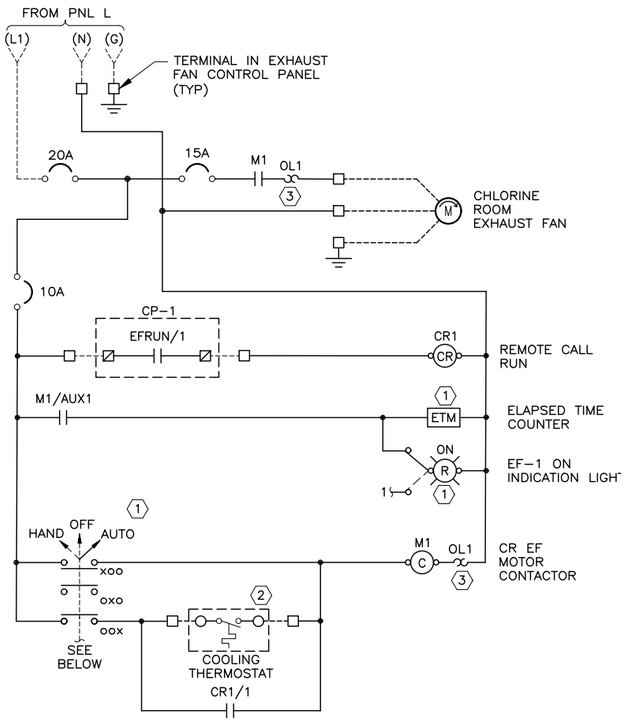

CHLORINE ROOM EF CONTROL DIAGRAM | A
N/A | —

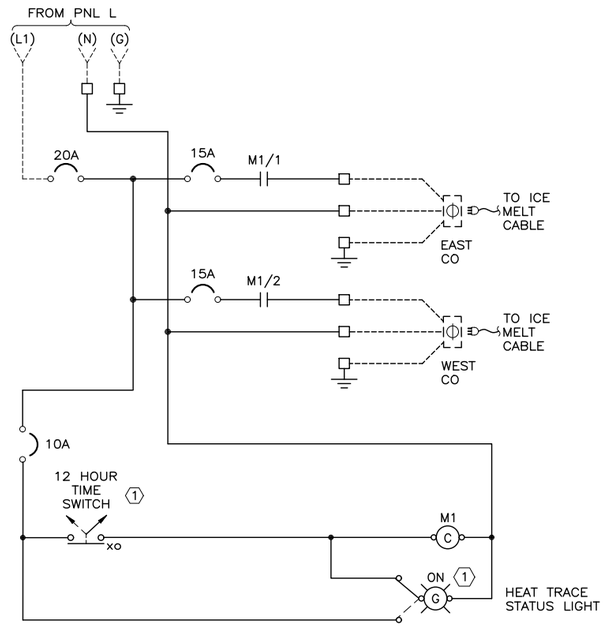

DE-ICE CABLE CONTROL DIAGRAM | B
N/A | —

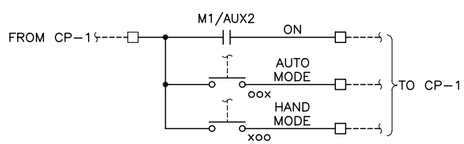

REGISTERED PROFESSIONAL ENGINEER No. 86-171214-2202 KEITH B. HEGERHORST 1/25/2019 STATE OF UTAH

FILE NAME:
FILE DATE:

HANSEN ALLEN & LUCE inc ENGINEERS	PROJECT ENGINEER	DESIGNED KBH	3					SCALE AS SHOWN	springville PUBLIC WORKS — 50 SOUTH MAIN SPRINGVILLE, UTAH 84663 — 400 SOUTH WELL-NO. 2 WELL HOUSE ELECTRICAL CP-2 CONTROL DIAGRAMS — SHEET NO. E2.4
		DRAFTED DAS	2						
		CHECKED KBH	1						
		DATE JANUARY 2019	NO.	DATE	REVISIONS	BY	APVD.		260-44-200

6/01

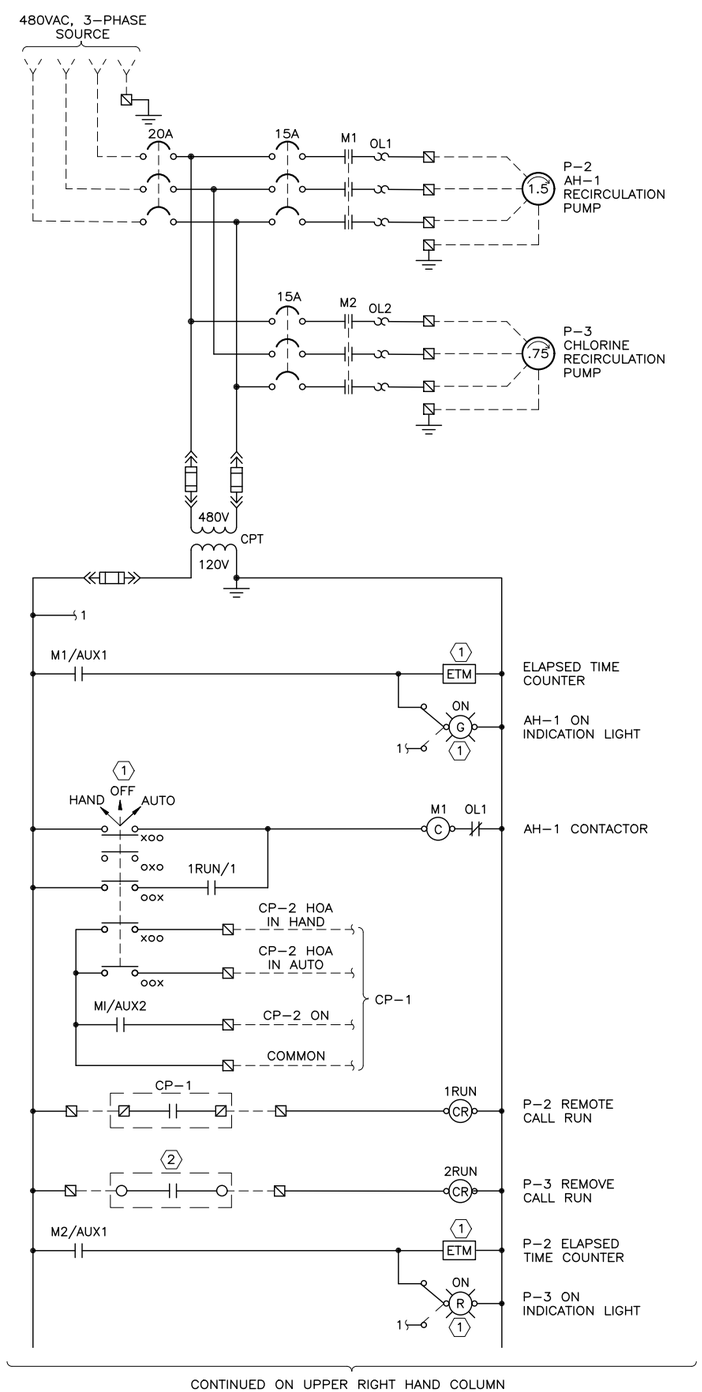

CONTINUED FROM LOWER LEFT HAND COLUMN

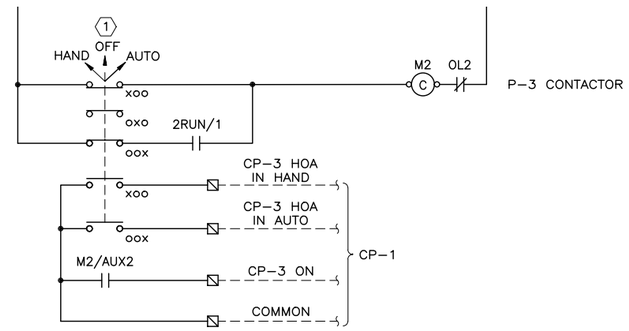

CP-3 CONTROL DIAGRAM

1" = 1'-0"

A

H.P.E. INC. ELECTRICAL ENGINEERS
POWER SYSTEMS, CONTROL & INSTRUMENTATION SYSTEMS
HEGERHORST POWER ENGINEERING INCORPORATED
708 EAST 50 SOUTH
AMERICAN FORK, UT 84003
(801) 642-2051
FAX (801) 642-2154

HPE PROJECT 18106

© 2018

FOR INFORMATION ABOUT THIS JOB, PLEASE CONTACT: KEITH HEGERHORST

GENERAL NOTES:

1. CONTROL DIAGRAM IS TYPICAL AND SHALL BE MODIFIED BY THE CONTRACTOR FOR HE DEVICES PROVIDED.

SHEET KEYNOTES:

1. DEVICE INSTALLED ON ENCLOSURE DOOR AND AVAILABLE TO THE OPERATOR.
2. REMOTE CALL RUN CONTACT PROVIDED BY THE MECHANICAL CONTRACTOR.

REGISTERED PROFESSIONAL ENGINEER No. 86-171214-2202 KEITH B. HEGERHORST 1/25/2019 STATE OF UTAH

FILE NAME:
FILE DATE:

HANSEN ALLEN & LUCE inc ENGINEERS

PROJECT ENGINEER

DESIGNED KBH	3				
DRAFTED DAS	2				
CHECKED KBH	1				
DATE JANUARY 2019	NO.	DATE	REVISIONS	BY	APVD.

SCALE: AS SHOWN

springville PUBLIC WORKS

50 SOUTH MAIN
SPRINGVILLE, UTAH
84663

400 SOUTH WELL-NO. 2 WELL HOUSE
ELECTRICAL
CP-3 CONTROL DIAGRAM

SHEET NO. E2.5

260-44-200

6/01

WELL PANELBOARD MDP

LOCATION: OUTSIDE | MFGR: SQUARE D | 800 AMPS | VOLTS: 480Y/277
DIMENSIONS: 32"W x 8.25"D x 48"H | TYPE: I-LINE, HCM | X M.L.O. | PHASE: 3
MOUNTING: SURFACE | NEMA: 3R | 22,000 A.I.C. | WIRES: 4
FEED: BOTTOM | X SPD | FED FROM: UTILITY

BRKR A	BRKR P	DESCRIPTION	WIRE ID	CONT. WATTS	N-CONT. WATTS	NO	A CONT.	A N-CONT.	B CONT.	B N-CONT.	C CONT.	C N-CONT.
800	3	WELL VFD	2-335	371,189		1	123,730		123,730		123,730	
100	3	PANELBOARD H	42	12,207	13,559	2	6,010	4,676	3,290	5,106	2,906	3,776
		SPACE				3						
		SPACE				4						
		TOTAL WATTS:		383,396	13,559		129,740	4,676	127,020	5,106	126,636	3,776
		CONTINUOUS LOAD:		383,396								
		CONTINUOUS LOAD * 125%:		479,245								
		NON-CONTINUOUS LOAD:		13,559			LABEL BOTH DEVICES AS "MAIN SERVICE DISCONNECT"					
		DESIGN WATTS:		492,804								
		MIN. RATING (AMPS):		593								

WELL TRANSFORMER L

LOCATION: PUMP HOUSE | 13.7 PRIMARY AMPS | PRIMARY VOLTS: 480
DIMENSIONS: 14.75"W x 9.00"D x 14.75"H | 27.5 SECONDARY AMPS | SECONDARY VOLTS: 240/120
MOUNTING: WALL | KVA: 7.5
FEED: SIDE | FED FROM: PANELBOARD H

	CONT. WATTS	N-CONT. WATTS	A CONT.	A N-CONT.	B CONT.	B N-CONT.
PANELBOARD L	3,488	2,230	3,104	900	384	1,330
TOTAL WATTS:	3,488	2,230	3,104	900	384	1,330
CONTINUOUS LOAD:	3,488					
CONTINUOUS LOAD * 125%:	4,360					
NON-CONTINUOUS LOAD:	2,230					
DESIGN WATTS:	6,590					

CP-2

LOCATION: PUMP ROOM | MFGR: CUSTOM | CUSTOM AMPS | VOLTS: 120
DIMENSIONS: 20"W x 5.75"D x 38"H | TYPE: N/A | M.C.B. | PHASE: 1
MOUNTING: SURFACE | NEMA: 1 | A.I.C. | WIRES: 3
FEED: N/A | FED FROM: XFMR L

BRKR A	BRKR P	DESCRIPTION	WIRE SIZE	CONT. WATTS	N-CONT. WATTS	NO	B CONT.	B N-CONT.
15	1	CHLORINE RM EF (EF.1)		180		1	180	0
10	1	CONTROLS			150	2	0	150
						3	0	0
		TOTAL WATTS:		180	150		180	150
		CONTINUOUS LOAD:		180				
		CONTINUOUS LOAD * 125%:		225				
		NON-CONTINUOUS LOAD:		150				
		DESIGN WATTS:		375				
		MIN. RATING (AMPS):		3				

CP-3

LOCATION: PUMP ROOM | MFGR: CUSTOM | CUSTOM AMPS | VOLTS: 480
DIMENSIONS: BY CONTRACTOR | TYPE: N/A | 20 M.C.B. | PHASE: 3
MOUNTING: WALL | NEMA: 1 | WIRES: 3
FEED: N/A | FED FROM: XFMR L

BRKR A	BRKR P	DESCRIPTION	WIRE SIZE	CONT. WATTS	N-CONT. WATTS	NO	A CONT.	A N-CONT.	B CONT.	B N-CONT.	C CONT.	C N-CONT.
15	3	AH.1 CIRCULATION PUMP (1.5HP)		2,491		1	830	0	830	0	830	0
15	3	CHLORINE CIRC. PUMP (3/4HP)			1,329	2	0	443	0	443	0	443
		TOTAL WATTS:		2,491	1,329		830	443	830	443	830	443
		CONTINUOUS LOAD:		2,491								
		CONTINUOUS LOAD * 125%:		3,114								
		NON-CONTINUOUS LOAD:		1,329								
		DESIGN WATTS:		4,443								
		MIN. RATING (AMPS):		5								

WELL PANELBOARD H

LOCATION: PUMP ROOM | MFGR: SQUARE D | 125 AMPS | VOLTS: 480Y/277
DIMENSIONS: 20"W x 5.75"D x 32"H | TYPE: NF | X M.L.O. | PHASE: 3
MOUNTING: SURFACE | NEMA: 1 | 22,000 A.I.C. | WIRES: 4
FEED: TOP | X SPD | FED FROM: UTILITY

BRKR A	BRKR P	DESCRIPTION	WIRE ID	CONT. WATTS	N-CONT. WATTS	NO	A CONT.	A N-CONT.	B CONT.	B N-CONT.	C CONT.	C N-CONT.	NO	N-CONT. WATTS	CONT. WATTS	WIRE ID	DESCRIPTION	BRKR A	BRKR P
15	3	AIR HANDLER (AH.1)	312	2,076		1	2,076	1,667					2	1,667		412	UNIT HEATER (UH.1)	20	3
-	-	-	-	2,076		3			2,076	1,667			4	1,667		-	-	-	-
-	-	-	-	2,076		5					2,076	1,667	6	1,667		-	-	-	-
20	2	TRANSFORMER L	212	3,104	900	7	3,104	2,567					8	1,667		412	UNIT HEATER (UH.2)	20	3
-	-	-	-	384	1,330	9			384	2,997			10	1,667		-	-	-	-
20	3	CONTROL PANEL (CP-3)	312	830	443	11					830	2,110	12	1,667		-	-	-	-
-	-	-	-	830	443	13	830	443					14				SPACE		
-	-	-	-	830	443	15			830	443			16				SPACE		
		SPACE				17					0	0	18				SPACE		
		TOTAL WATTS:		12,207	3,559		6,010	4,676	3,290	5,106	2,906	3,776		10,000	0				
		CONTINUOUS LOAD:		12,207															
		CONTINUOUS LOAD * 125%:		15,259															
		NON-CONTINUOUS LOAD:		13,559			** SEE ONE-LINE DIAGRAM												
		DESIGN WATTS:		28,818															
		MIN. RATING (AMPS):		35															

WELL PANELBOARD L

LOCATION: PUMP ROOM | MFGR: SQUARE D | 100 AMPS | VOLTS: 240/120
DIMENSIONS: 20"W x 5.75"D x 38"H | TYPE: NQ | 35 M.C.B. | PHASE: 1
MOUNTING: SURFACE | NEMA: 1 | 10,000 A.I.C. | WIRES: 3
FEED: TOP | X SPD | FED FROM: XFMR L

BRKR A	BRKR P	DESCRIPTION	WIRE ID	CONT. WATTS	N-CONT. WATTS	NO	A CONT.	A N-CONT.	B CONT.	B N-CONT.	NO	N-CONT. WATTS	CONT. WATTS	WIRE ID	DESCRIPTION	BRKR A	BRKR P
20	1	LTS, INTERIOR	212	304		1	404	0			2		100	212	HVAC CONTROLLER	20	1
20	1	LTS, EXTERIOR	212	54		3			104	0	4		50	212	FLOW METER (FIT-1)	20	1
20	1	RECPT, INTERIOR	212		720	5	1,000	720			6		1000	212	CONTROL PANEL (CP-1)	20	1
20	1	RECPT, OUTSIDE	212		180	7			180	330	8	150	180	212	CONTROL PANEL (CP-2)	20	1
20	1	RECPT, CHLORINE ROOM	212		180	9	1,600	180			10		1600	212	CONTROL PANEL (CP-2)	20**	1
20	1	BASEBOARD HEATER (BBH.1)	212		1,000	11			0	1,000	12				SPARE	20	1
20	1	CHLORINE SCALES (WIT-1A/1B)	212	100		13	100	0			14				SPARE	20	1
20	1	CHLORINE LEAK ALARM (ASH-1)	212	100		15			100	0	16				SPACE		1
	1	SPACE				17	0	0			18				SPACE		1
		TOTAL WATTS:		558	2,080		3,104	900	384	1,330	0	0	150	2,930			
		CONTINUOUS LOAD:		3,488													
		CONTINUOUS LOAD * 125%:		4,360													
		NON-CONTINUOUS LOAD:		2,230			** PROVIDE GFC CIRCUIT BREAKER.										
		DESIGN WATTS:		6,590													
		MIN. RATING (AMPS):		27													

HVAC MECHANICAL EQUIPMENT SCHEDULE

ITEM	DESCRIPTION	EQUIPMENT RATING VOLTS	PH	HP	WATTS	FLA	MCA	DISCONNECT AMPS	VOLTS	POLES	NEMA	FUSE	CONNECTION	STARTER TYPE	STARTER NEMA SIZE	NOTES
AH.1	AIR HANDLER	480	3	5		7.6	-	-	-	-	-	-	HARD-WIRED	VFD	-	2)
BBH.1	BASEBOARD HEATER	120	1	-	1,000	8.33	-	-	-	-	-	-	HARD-WIRED	-	-	
UH.1	UNIT HEATER	480	3	-	5,000	6.02		-	-	-	-	-	HARD-WIRED	INCL.	-	1)
UH.1	UNIT HEATER	480	3	-	5,000	6.02		-	-	-	-	-	HARD-WIRED	INCL.	-	1)

NOTES: 1) NO DISCONNECT REQUIRED AS LOAD IS WITHIN SITE OF PANELBOARD.
2) VFD SUPPLIED WITH AIR HANDLER. CONTROLS BY MECHANICAL CONTRACTOR.

FIXTURE SCHEDULE

TYPE	DESCRIPTION	MANUFACTURER NAME	CATALOG NO.	FIX VA	LAMP	MOUNTING	NOTES:
F1	4' LED ENCLOSED INDUSTRIAL, FIBERGLASS HOUSING, DAMP LOCATION, MVOLT, 4,000 LUMENS	METALUX	4VT2LED-LD4-4-DR-UNV-L840-CD-1-U	38	FURNISHED	SURFACE	
F2	LED WALL MOUNTED FULL CUTOFF MINI AREA WALL PACK FOR WET LOCATIONS	LUMARK	XTOR21-PC1	18	FURNISHED	WALL	WITH BUILT-IN PHOTO CELL

EQUIPMENT SCHEDULE

ITEM	DESCRIPTION	EQUIPMENT RATING VOLTS	PH	HP	WATTS	FLA	MCA	DISCONNECT AMPS	VOLTS	POLES	NEMA	FUSE	CONNECTION	STARTER TYPE	STARTER NEMA SIZE	NOTES
ASH-1	CHLORINE LEAK DETECTOR	120	1	-	-		-	-	-	-	-	-	HARD-WIRED	N/A	N/A	-
CP-1	MAIN CONTROL PANEL	120	1	-	-		-	-	-	-	-	-	HARD-WIRED	N/A	N/A	-
CP-2	CONTROL PANEL	120	1													
CP-3	CONTROL PANEL	480	3	-	-		-	-	-	-	-	-	HARD-WIRED	N/A	N/A	
P-1	WELL PUMP	460	3	400	-	447	-	-	-	-	-	-	HARD-WIRED	VFD	400 HP	1)
P-2	CHLORINE DILUTION PUMP	480	3	0.75	1,329	1.6	-	-	-	-	-	-	HARD-WIRED	FVNR	0	
P-3	AIR HANDLER CIRCULATION PUMP	480	3	1.5	2,491	3	-	-	-	-	-	-	HARD-WIRED	FVNR	0	3)

NOTES: 1) REFER TO TYPICAL VFD CONTROL DIAGRAM ON E2.1.
2) NOT USED.
3) CONTROLS BY MECHANICAL CONTRACTOR.

H.P.E. INC. ELECTRICAL ENGINEERS
POWER SYSTEMS, CONTROL & INSTRUMENTATION SYSTEMS
HEGERHORST POWER ENGINEERING INCORPORATED (801) 642-2051
708 EAST 50 SOUTH FAX (801) 642-2154
AMERICAN FORK, UT 84003
HPE PROJECT 18106

© 2019

FOR INFORMATION ABOUT THIS JOB, PLEASE CONTACT: KEITH HEGERHORST

GENERAL NOTES:

1. NOT USED.

SHEET KEYNOTES:

1. NOT USED.

REGISTERED PROFESSIONAL ENGINEER No. 86-171214-2202 KEITH B. HEGERHORST 1/25/2019 STATE OF UTAH

FILE NAME:
FILE DATE:

H.P.E. INC. ELECTRICAL ENGINEERS
POWER SYSTEMS, CONTROL & INSTRUMENTATION SYSTEMS
HEGERHORST POWER ENGINEERING INCORPORATED (801) 642-2051
708 EAST 50 SOUTH FAX (801) 642-2154
AMERICAN FORK, UT 84003
HPE PROJECT **18106**
© 2019
FOR INFORMATION ABOUT THIS JOB, PLEASE CONTACT: **KEITH HEGERHORST**

ELECTRICAL SITE PLAN 1 —
0 5' 10' 20' 30'
1"=10'

GENERAL NOTES:

1. REFER TO ONE-LINE DIAGRAM FOR WIRE AND CONDUIT REQUIREMENTS.
2. SPRINGVILLE CITY CONDUIT AND TRENCHING REQUIREMENTS ARE PROVIDED ON THE SPRINGVILLE CITY WEB SITE. PLEASE REFER TO THE ON-LINE DETAILS.

SHEET KEYNOTES:

1. INSTALL 2 EA 2" CONDUITS FROM THE FIBER OPTIC RACK TO THE FIBER OPTIC POLE. COORDINATE POLE LOCATION WITH OWNER DURING CONSTRUCTION. LOCATION SHOWN IS APPROXIMATE.
2. OWNER TO INSTALL FIBER FROM EXISTING SUBSTATION TO WELL. ROUTE: UNDERGROUND TO N.E. CORNER OF SUBSTATION IN EXISTING CONDUIT, THEN OVERHEAD ON THREE POLES (ONE IS EXISTING), THEN UNDERGROUND TO FO RACK IN WELL BUILDING IN CONTRACTOR INSTALLED 2" CONDUITS.

REGISTERED PROFESSIONAL ENGINEER No. 86-171214-2202 KEITH B. HEGERHORST 1/25/2019 STATE OF UTAH

FILE NAME:
FILE DATE:

HANSEN ALLEN & LUCE inc ENGINEERS

PROJECT ENGINEER

DESIGNED KBH	3				
DRAFTED DAS	2				
CHECKED KBH	1				
DATE JANUARY 2019	NO.	DATE	REVISIONS	BY	APVD.

SCALE AS SHOWN

springville PUBLIC WORKS

50 SOUTH MAIN
SPRINGVILLE, UTAH
84663

400 SOUTH WELL-NO. 2 WELL HOUSE
ELECTRICAL
ELECTRICAL SITE PLAN

SHEET NO. E4.0

260-44-200

6/01

H.P.E. INC. ELECTRICAL ENGINEERS
POWER SYSTEMS, CONTROL & INSTRUMENTATION SYSTEMS
HEGERHORST POWER ENGINEERING INCORPORATED (801) 642-2051
708 EAST 50 SOUTH FAX (801) 642-2154
AMERICAN FORK, UT 84003
HPE PROJECT 18106
© 2019
FOR INFORMATION ABOUT THIS JOB, PLEASE CONTACT: KEITH HEGERHORST

GENERAL NOTES:

1. REFER TO PANEL SCHEDULE AND CONDUIT/ CONDUCTOR TABLE FOR FOR WIRE AND CONDUIT REQUIREMENTS.
2. INSTALL ALL INTERIOR OUTLETS AT +36" ABOVE THE FINISHED FLOOR.
3. INSTALL CONTROL AND POWER PANELS +72" TO TOP.

SHEET KEYNOTES:

1. INSTALL OUTLET 12-INCHES ABOVE DEVICE.
2. INSTALL DEVICE AT +18 AFS AND PROVIDE IN-SERVICE WEATHERPROOF COVER.
3. OUTLET FOR DOWNSPOUT ICE-MELT CABLE. WIRE 3/4"C, 2#12, #12G TO CONTACTOR IN CP-2. INSTALL AT +18" ABOVE SIDEWALK AND PROVIDE IN-SERVICE DEVICE COVER.
4. COORDINATE WITH HVAC CONTRACTOR DURING CONSTRUCTION FOR HEIGHT OF HVAC CONTROLLER.
5. COORDINATE WITH HVAC CONTRACTOR DURING CONSTRUCTION FOR LOCATION OF BBH THERMOSTAT PRIOR TO CONDUIT ROUGH-IN.
6. PROVIDE A 4-INCH HIGH CONCRETE EQUIPMENT HOUSEKEEPING PAD. EXTEND PAD 4-INCHES IN FRONT AND SIDES OF EQUIPMENT.

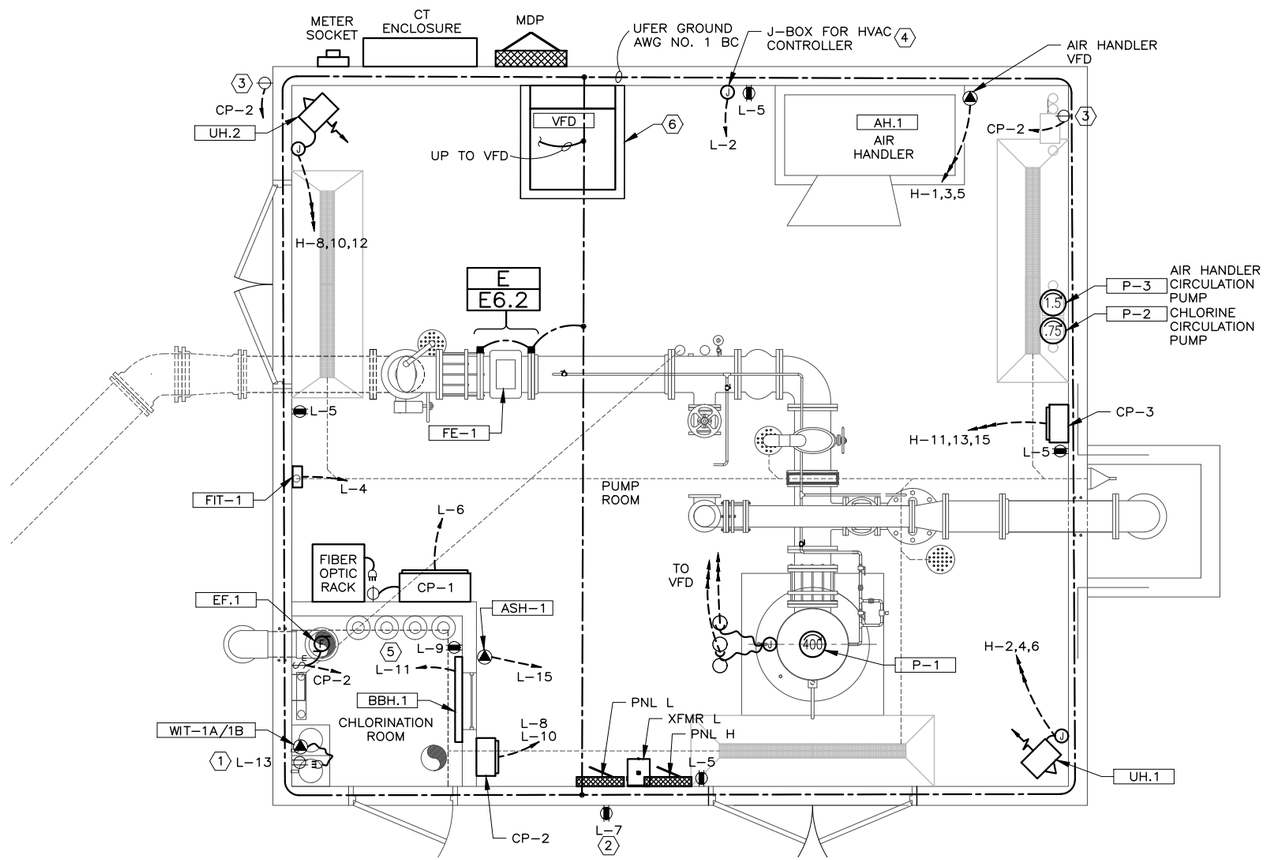

POWER & GROUNDING PLAN 1 —

0 2' 4' 8
3/8"=1'-0"

N

REGISTERED PROFESSIONAL ENGINEER
No. 86-171214-2202
KEITH B. HEGERHORST
1/25/2019
STATE OF UTAH

FILE NAME:
FILE DATE:

HANSEN ALLEN & LUCE inc. ENGINEERS

PROJECT ENGINEER

DESIGNED KBH	3				
DRAFTED DAS	2				
CHECKED KBH	1				
DATE JANUARY 2019	NO.	DATE	REVISIONS	BY	APVD.

SCALE AS SHOWN

springville PUBLIC WORKS

50 SOUTH MAIN
SPRINGVILLE, UTAH
84663

400 SOUTH WELL-NO. 2 WELL HOUSE
ELECTRICAL
BUILDING POWER & GROUNDING PLAN

SHEET NO. E5.0

260-44-200

6/01

H.P.E. INC. ELECTRICAL ENGINEERS
POWER SYSTEMS, CONTROL & INSTRUMENTATION SYSTEMS
HEGERHORST POWER ENGINEERING INCORPORATED (801) 642-2051
708 EAST 50 SOUTH FAX (801) 642-2154
AMERICAN FORK, UT 84003
HPE PROJECT **18106**
© 2019
FOR INFORMATION ABOUT THIS JOB, PLEASE CONTACT: **KEITH HEGERHORST**

GENERAL NOTES:

1. REFER TO INSTRUMENTATION AND CONTROL ONE-LINE DIAGRAM FOR WIRE AND CONDUIT REQUIREMENTS.
2. VERIFY LOCATIONS OF ALL DEVICES PRIOR TO CONDUIT ROUGH-IN.

SHEET KEYNOTES:

1. COOLING THERMOSTAT.
2. FOR ALL CONDUIT FROM BELOW THE FLOOR, PROVIDE CONDUIT SUPPORTING AS SHOWN.
3. DEVICES LOCATED ON OR NEAR VALVE.

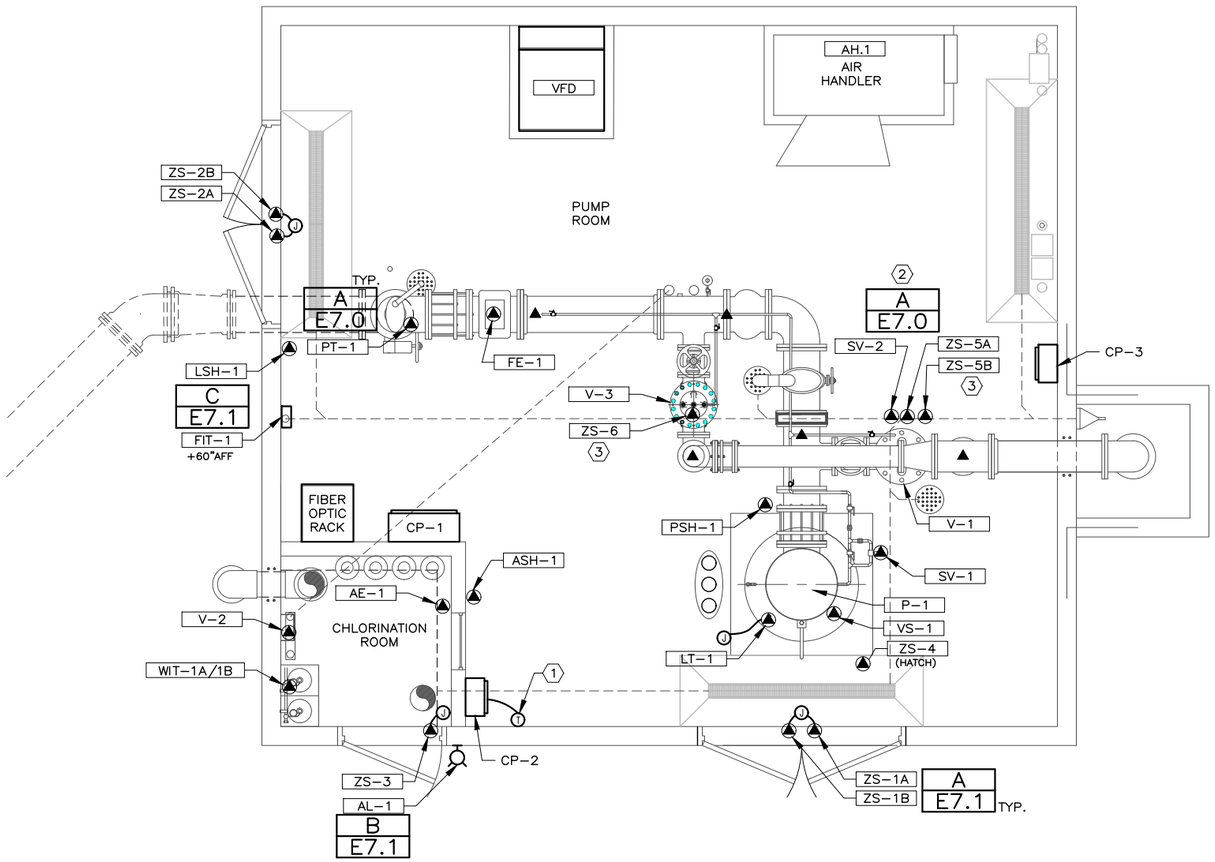

INSTRUMENTATION & CONTROL PLAN 1 —

0 2' 4' 8

3/8"=1'-0"

N

REGISTERED PROFESSIONAL ENGINEER No. 86-171214-2202 KEITH B. HEGERHORST 1/25/2019 STATE OF UTAH

FILE NAME:
FILE DATE:

HANSEN ALLEN & LUCE inc ENGINEERS	PROJECT ENGINEER	DESIGNED KBH	3					SCALE AS SHOWN	springville PUBLIC WORKS	50 SOUTH MAIN SPRINGVILLE, UTAH 84663	400 SOUTH WELL-NO. 2 WELL HOUSE ELECTRICAL BUILDING INSTR. & CONTROL PLAN	SHEET NO. E5.1
		DRAFTED DAS	2									
		CHECKED KBH	1									
		DATE JANUARY 2019	NO.	DATE	REVISIONS	BY	APVD.					260-44-200

6/01

H.P.E. INC. ELECTRICAL ENGINEERS
POWER SYSTEMS, CONTROL & INSTRUMENTATION SYSTEMS
HEGERHORST POWER ENGINEERING INCORPORATED (801) 642-2051
708 EAST 50 SOUTH FAX (801) 642-2154
AMERICAN FORK, UT 84003
HPE PROJECT 18106
© 2019
FOR INFORMATION ABOUT THIS JOB, PLEASE CONTACT: KEITH HEGERHORST

GENERAL NOTES:

1. REFER TO PANEL SCHEDULE AND CONDUIT/CONDUCTOR TABLE FOR WIRE AND CONDUIT REQUIREMENTS.
2. NOT USED.

SHEET KEYNOTES:

1. ADJUST FIXTURE LOCATION AS REQUIRED FOR WELL ROOF HATCH OPENING.
2. REFER TO A-1 FOR MOUNTING HEIGHT OF EXTERIOR FIXTURES.
3.

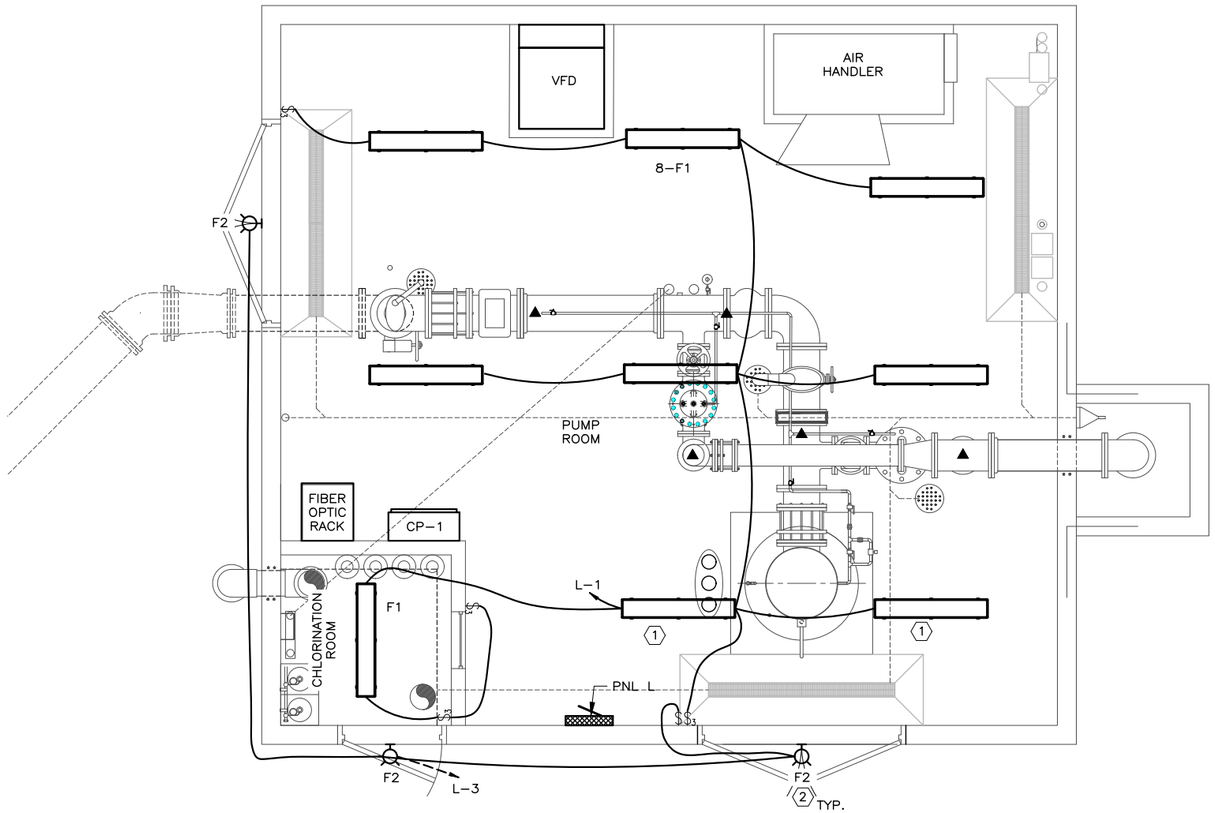

LIGHTING PLAN 1
0 2' 4' 8'
3/8"=1'-0"
N

REGISTERED PROFESSIONAL ENGINEER No. 86-171214-2202 KEITH B. HEGERHORST 1/25/2019 STATE OF UTAH

FILE NAME:
FILE DATE:

HANSEN ALLEN & LUCE inc ENGINEERS

PROJECT ENGINEER

DESIGNED KBH	3			
DRAFTED DAS	2			
CHECKED KBH	1			
DATE JANUARY 2019	NO.	DATE	REVISIONS	BY / APVD.

SCALE AS SHOWN

springville PUBLIC WORKS

50 SOUTH MAIN
SPRINGVILLE, UTAH
84663

400 SOUTH WELL-NO. 2 WELL HOUSE
ELECTRICAL
BUILDING LIGHTING PLAN

SHEET NO. E5.2

260-44-200

6/01

H.P.E. INC. ELECTRICAL ENGINEERS
POWER SYSTEMS, CONTROL & INSTRUMENTATION SYSTEMS
HEGERHORST POWER ENGINEERING INCORPORATED (801) 642-2051
708 EAST 50 SOUTH FAX (801) 642-2154
AMERICAN FORK, UT 84003
HPE PROJECT **18106**
© 2019
FOR INFORMATION ABOUT THIS JOB, PLEASE CONTACT: **KEITH HEGERHORST**

GENERAL NOTES:

1. TYPICAL CONTROL PANEL ARRANGEMENT SHOWN. CONTRACTOR SHALL DETERMINE ENCLOSURE DIMENSIONS BASED ON REQUIRED COMPONENTS. INTERNAL ARRANGEMENT OF COMPONENTS DETERMINED BY CONTRACTOR. REFER TO TYPICAL CONTROL WIRING DIAGRAM.

SHEET KEYNOTES:

1. NOT USED.

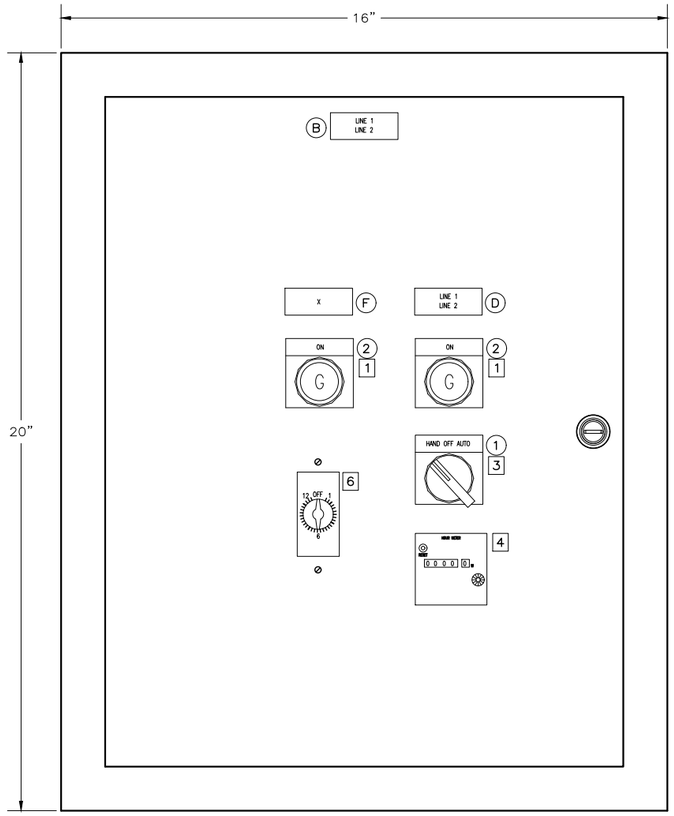

CP-2 EXHAUST FAN CONTROL PANEL A
6" = 1'-0"

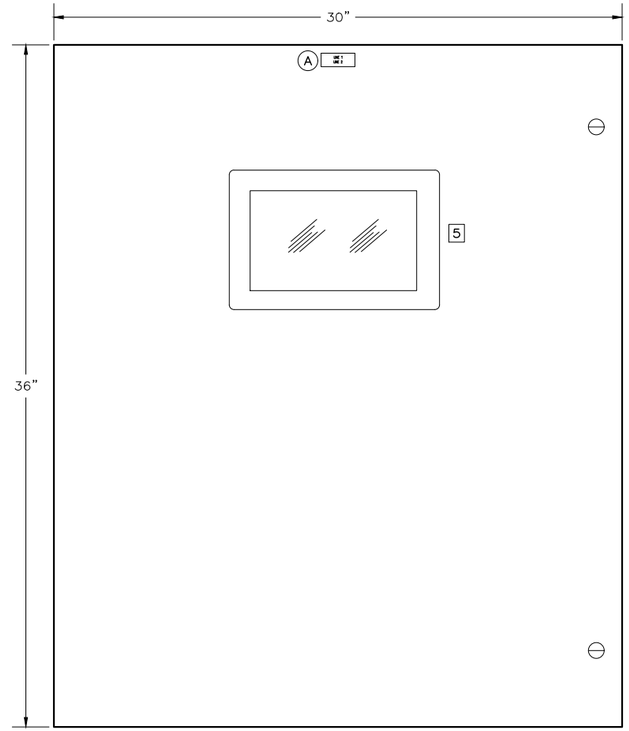

CP-1 MAIN CONTROL PANEL B
3" = 1'-0"

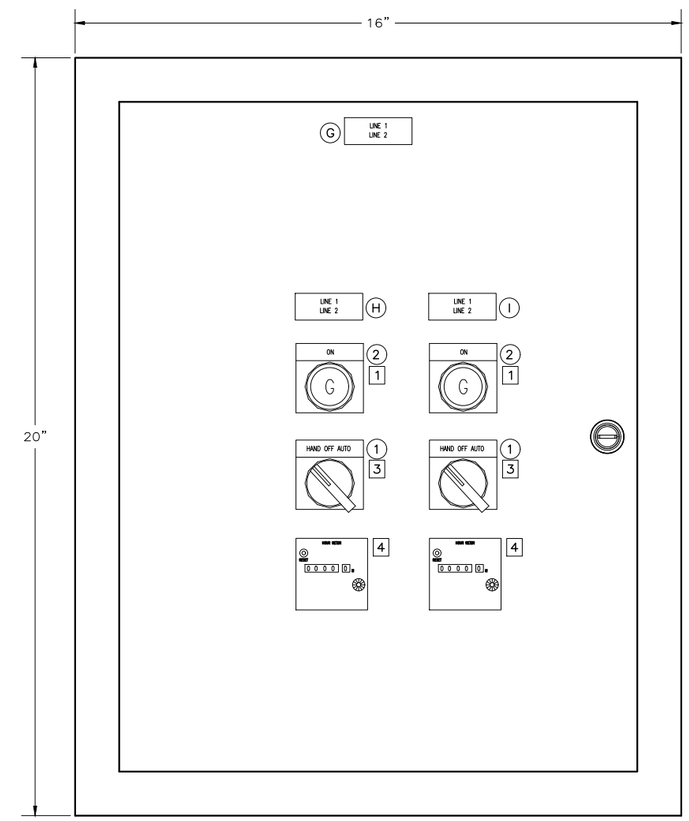

CP-3 PUMP CONTROL PANEL D
6" = 1'-0"

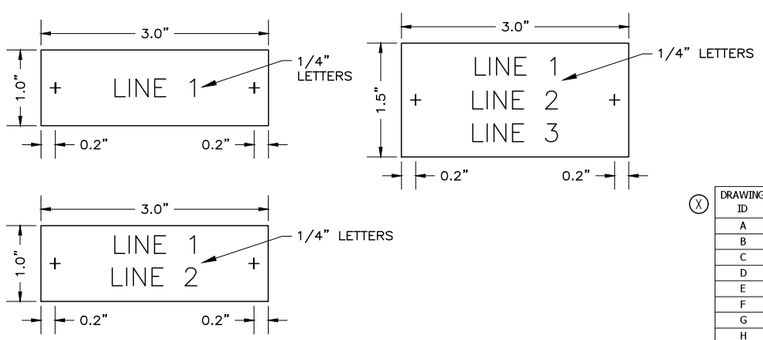

NAMEPLATES C
1" = 1'-0"

LEGEND PLATE SCHEDULE

DRAWING ID	LEGEND PLATE
1	HAND OFF AUTO
2	ON
3	OFF
4	OFF ON
5	
6	

X NAMEPLATE SCHEDULE

DRAWING ID	LINE 1	LINE 2	LINE 3
A	CP-1	MAIN CONTROL PANEL	-
B	CP-2	EXHAUST FAN	CONTROL PANEL
C	EQUIPMENT ROOM	EXHAUST FAN	-
D	CHLORINE ROOM	EXHAUST FAN	-
E	CONTROL POWER	-	-
F	ICE MELT CABLES	-	-
G	CP-3	PUMP CONTROL PANEL	-
H	CHLORINE	CIRCULATION PUMP	-
I	AIR HANDLER	CIRCULATION PUMP	-

DEVICE SCHEDULE

DRAWING ID	DESCRIPTION
1	LED INDICATOR LIGHT, GREEN
2	LED INDICATOR LIGHT, RED
3	SELECTOR SWITCH, THREE-POSITION, MAINTANINED CONTACT
4	ELAPSED TIME COUNTER
5	8-INCH COLOR TOUCH OPERATOR DISPLAY
6	12-HOUR SPRING WOUND TIME SWITCH
7	

REGISTERED PROFESSIONAL ENGINEER No. 86-171214-2202 KEITH B. HEGERHORST 1/25/2019 STATE OF UTAH

FILE NAME:
FILE DATE:

HANSEN ALLEN & LUCE inc ENGINEERS

PROJECT ENGINEER

DESIGNED KBH	3				
DRAFTED DAS	2				
CHECKED KBH	1				
DATE JANUARY 2019	NO.	DATE	REVISIONS	BY	APVD.

SCALE AS SHOWN

springville PUBLIC WORKS

50 SOUTH MAIN
SPRINGVILLE, UTAH
84663

400 SOUTH WELL-NO. 2 WELL HOUSE
ELECTRICAL
CONTROL PANEL ELEVATIONS

SHEET NO. E6.0

260-44-200

6/01

H.P.E. INC. ELECTRICAL ENGINEERS
POWER SYSTEMS, CONTROL & INSTRUMENTATION SYSTEMS
HEGERHORST POWER ENGINEERING INCORPORATED (801) 642-2051
708 EAST 50 SOUTH FAX (801) 642-2154
AMERICAN FORK, UT 84003
HPE PROJECT 18106
© 2019
FOR INFORMATION ABOUT THIS JOB, PLEASE CONTACT: KEITH HEGERHORST

GENERAL NOTES:

1. NOT USED.

SHEET KEYNOTES:

1. NOT USED.

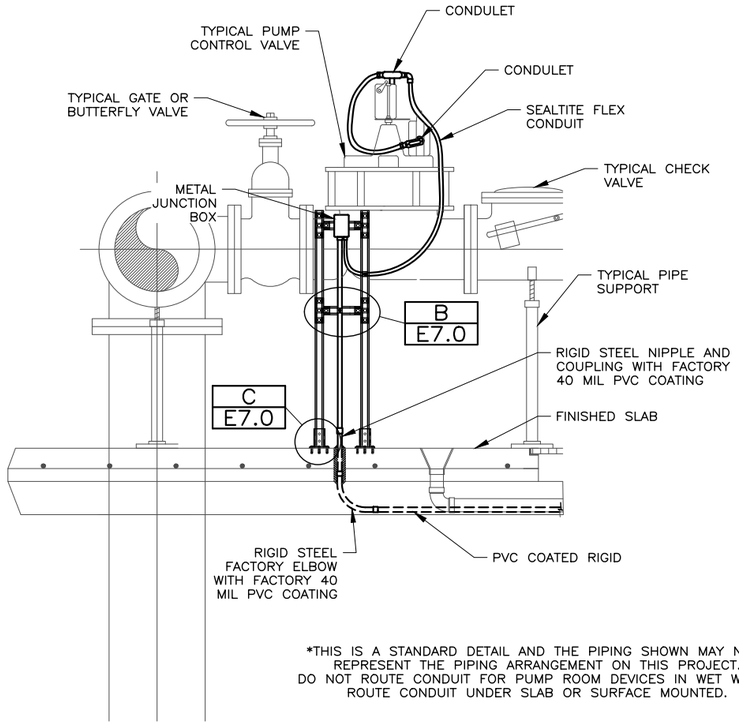

*THIS IS A STANDARD DETAIL AND THE PIPING SHOWN MAY NOT REPRESENT THE PIPING ARRANGEMENT ON THIS PROJECT. DO NOT ROUTE CONDUIT FOR PUMP ROOM DEVICES IN WET WELL. ROUTE CONDUIT UNDER SLAB OR SURFACE MOUNTED.

CONDUIT SUPPORT INSTALLATION A
1" = 1'-0" —

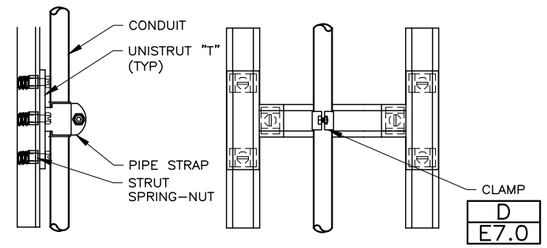

SUPPORT BRACE INSTALLATION B
3" = 1'-0" —

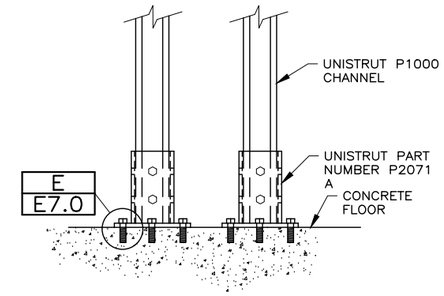

SUPPORT BASE INSTALLATION C
3" = 1'-0" —

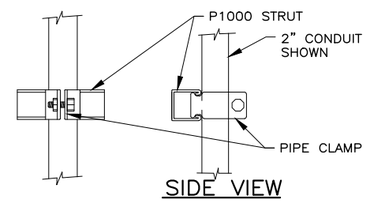

SIDE VIEW

CONDUIT PIPE CLAMPS*			
SIZE	EMT	RGS	EMT/RGS
1/2"	P1426	P1111	–
3/4"	P1427	P1112	P1212
1"	P1428	P1113	P1213
1-1/4"	P1429	P1114	P1214
1-1/2"	P1430	P1115	P1215
2"	P1431	P1117	P1217
2-1/2"	P1118	P1118	–
3"	P1119	P1119	–
3-1/2"	P1120	P1120	–
4"	P1121	P1121	–

* = SUPPLIED WITH SLOTTED HEAD SCREW AND NUT

CONDUIT CLAMP INSTALLATION D
3" = 1'-0" —

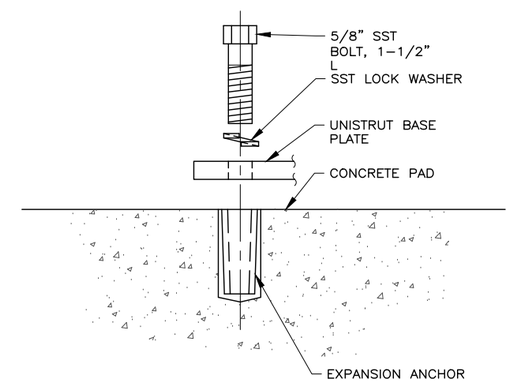

BASE ANCHOR INSTALLATION E
6" = 1'-0" —

REGISTERED PROFESSIONAL ENGINEER No. 86-171214-2202 KEITH B. HEGERHORST 1/25/2019 STATE OF UTAH

FILE NAME:
FILE DATE:

HANSEN ALLEN & LUCE INC ENGINEERS

PROJECT ENGINEER

DESIGNED KBH	3				
DRAFTED DAS	2				
CHECKED KBH	1				
DATE JANUARY 2019	NO.	DATE	REVISIONS	BY	APVD.

SCALE AS SHOWN

springville PUBLIC WORKS

50 SOUTH MAIN
SPRINGVILLE, UTAH
84663

400 SOUTH WELL-NO. 2 WELL HOUSE
ELECTRICAL
ELECTRICAL DETAILS, SHT. 1

SHEET NO. E7.0

260-44-200

6/01

H.P.E. INC. ELECTRICAL ENGINEERS
POWER SYSTEMS, CONTROL & INSTRUMENTATION SYSTEMS
HEGERHORST POWER ENGINEERING INCORPORATED (801) 642-2051
708 EAST 50 SOUTH FAX (801) 642-2154
AMERICAN FORK, UT 84003
HPE PROJECT 18106
© 2019
FOR INFORMATION ABOUT THIS JOB, PLEASE CONTACT: KEITH HEGERHORST

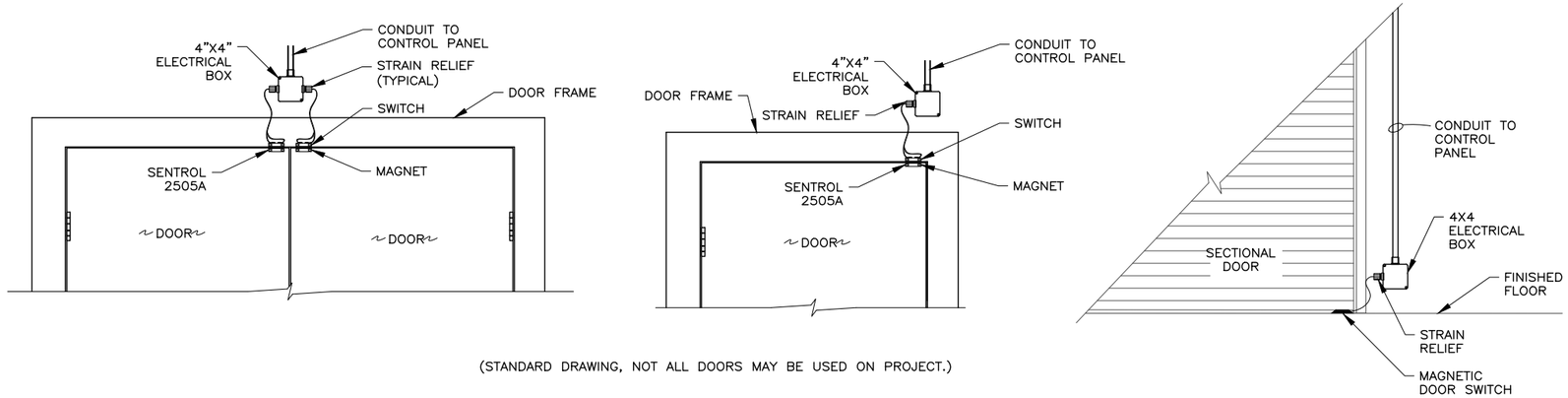

(STANDARD DRAWING, NOT ALL DOORS MAY BE USED ON PROJECT.)

POSITION DOOR SWITCH INSTALLATION A
1" = 1'-0" —

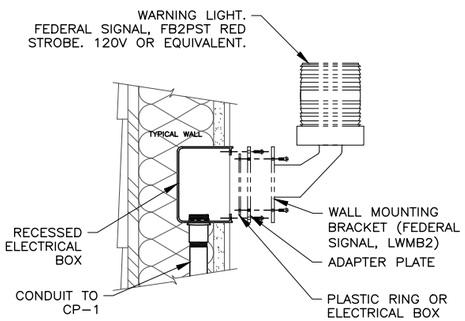

ALARM LIGHT DETAIL B
3" = 1'-0" —

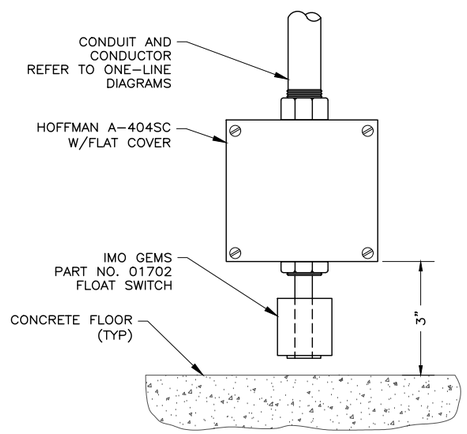

FLOOD LEVEL SWITCH INSTALLATION C
6" = 1'-0" —

REGISTERED PROFESSIONAL ENGINEER No. 86-171214-2202 KEITH B. HEGERHORST 1/25/2019 STATE OF UTAH

FILE NAME:
FILE DATE:

HANSEN ALLEN & LUCE inc ENGINEERS	PROJECT ENGINEER	DESIGNED KBH	3					SCALE AS SHOWN	springville PUBLIC WORKS	50 SOUTH MAIN SPRINGVILLE, UTAH 84663	400 SOUTH WELL-NO. 2 WELL HOUSE ELECTRICAL ELECTRICAL DETAILS, SHT. 2	SHEET NO. E7.1
		DRAFTED DAS	2									
		CHECKED KBH	1									
		DATE JANUARY 2019	NO.	DATE	REVISIONS	BY	APVD.					260-44-200

6/01

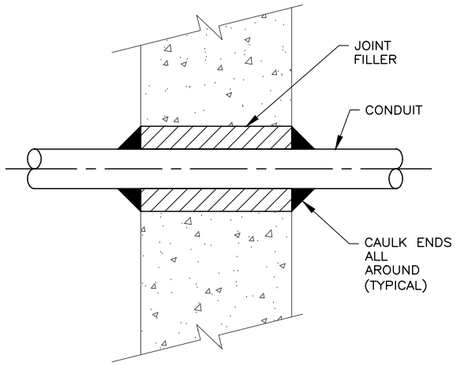

CONDUIT THRU EXISTING WALL **A**
3" = 1'-0" **—**

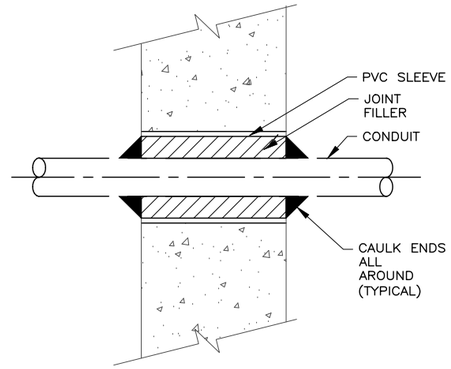

CONDUIT THRU NEW WALL **B**
3" = 1'-0" **—**

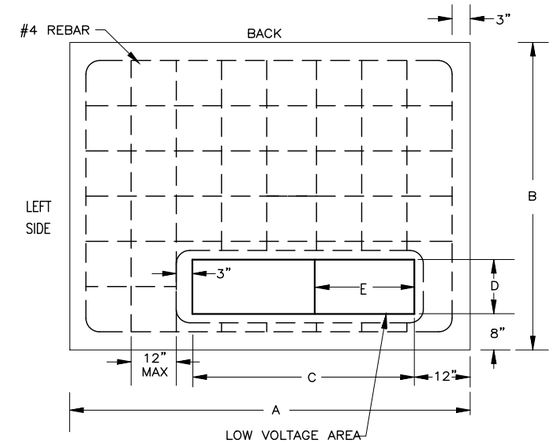

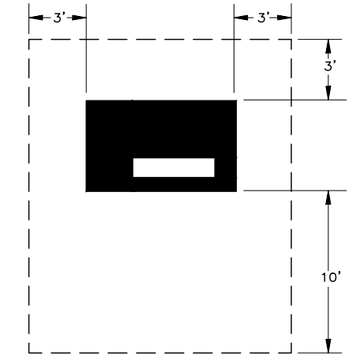

DETAIL "C"

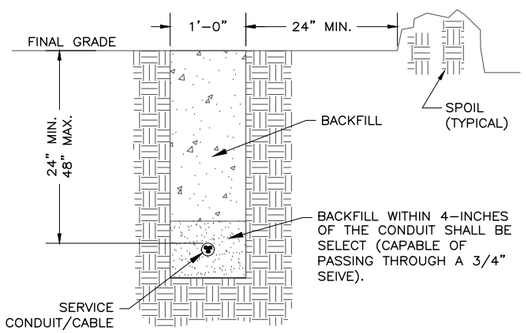

SECONDARY SERVICE TRENCH **C**
1" = 1'-0" **—**

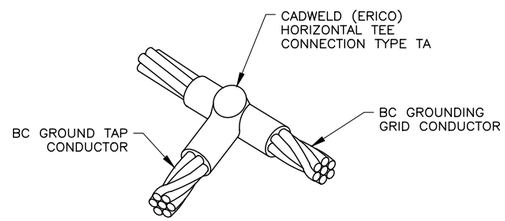

CADWELD GROUNDING DETAIL **D**
1' = 1'-0" **—**

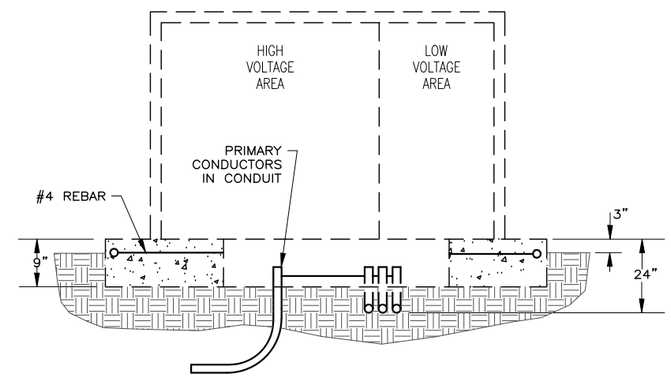

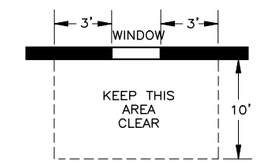

DETAIL "A"

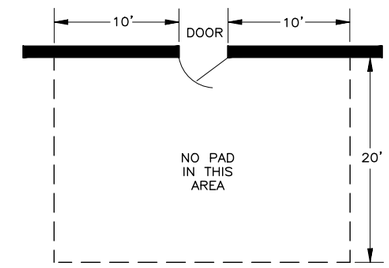

DETAIL "B"

TRANSFORMER PAD DIMENSION CHART					
TRANSFORMER RATING	DIMENSIONS				
	A	B	C	D	E
75-500KVA	84"	78"	48"	15"	20"
750-2500KVA	96"	82"	60"	16"	30"

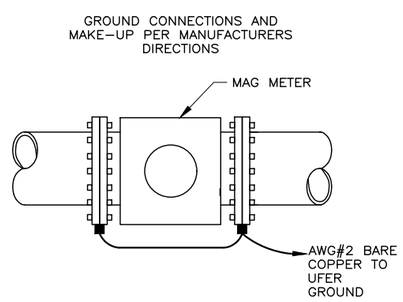

FLOW METER GROUNDING DETAIL **E**
1 1/2" = 1'-0" **—**

NOTES:

1. SITE PREPARATION: ALL DIRT BENEATH THE PAD SITE MUST BE COMPACTED AND LEVEL PRIOR TO SETTING OR POURING THE PAD TO PREVENT SETTLING.
2. CONCRETE: SHALL BE MADE USING A STANDARD BRAND OF PORTLAND CEMENT. STEEL REINFORCEMENT SHALL BE #4 REBAR PLACED ACCORDING TO THE DRAWINGS. THE PAD MUST BE POURED AT LEAST THREE FULL DAYS PRIOR TO SETTING THE UNIT. CONCRETE MUST BE KEPT ABOVE FREEZING AT LEAST 72 HOURS AFTER POURING. THE FINISHED SURFACE MUST BE COMPLETELY FLAT AND LEVEL. ALL WORK MUST BE DONE TO HIGH QUALITY STANDARDS.
3. PREFABRICATION: THE PAD MAY EITHER BE CONSTRUCTED ON THE SITE OR PREFABRICATED ACCORDING TO SPECIFICATIONS. PREFABRICATED PADS SHALL BE SET LEVEL AND PLUMB.
4. TRANSFORMER CONDUIT WINDOW LAYOUT: LOW VOLTAGE CONDUITS SHALL BE FORMED AS TIGHTLY AS POSSIBLE AGAINST RIGHT SIDE OF THE OPENING AND SHALL IN NO CASE EXTEND FURTHER THAN 16" FROM THE RIGHT SIDE OF CONDUIT WINDOW ON THE PAD. NO MORE THAN 4 CONDUITS WILL BE USED ON THE LOW VOLTAGE SIDE. DO NOT PUT ANY CONCRETE IN OR UNDER THE CONDUIT WINDOW. USE DIRT TO SEPARATE CONDUITS. BELL ENDS ARE REQUIRED FOR ALL METAL CONDUITS BUT NOT FOR PLASTIC CONDUIT.
5. CLEARANCE: THE FRONT OF THE PAD SHOULD ALWAYS FACE AWAY FROM ADJACENT STRUCTURES AND BE FREE OF OBSTRUCTIONS. AT LEAST THREE FEET MUST SEPARATE THE EDGES OF THE PAD FROM ANY ADJACENT STRUCTURES. THE EDGES OF THE PAD MUST BE AT LEAST TEN FEET FROM ANY COMBUSTIBLE STRUCTURE. THE AREA IN FRONT OF THE PAD MUST HAVE TEN FEET OF CLEAR LEVEL WORKING AREA FOR MAINTENANCE OF THE UNIT.

TRANSFORMER PAD **F**
3/4" = 1'-0" **—**

H.P.E. INC. ELECTRICAL ENGINEERS
POWER SYSTEMS, CONTROL & INSTRUMENTATION SYSTEMS
HEGERHORST POWER ENGINEERING INCORPORATED
708 EAST 50 SOUTH
AMERICAN FORK, UT 84003
(801) 642-2051
FAX (801) 642-2154
HPE PROJECT 18106

© 2019

FOR INFORMATION ABOUT THIS JOB, PLEASE CONTACT: KEITH HEGERHORST

REGISTERED PROFESSIONAL ENGINEER
No. 86-171214-2202
KEITH B. HEGERHORST
1/25/2019
STATE OF UTAH

FILE NAME:
FILE DATE:

HANSEN ALLEN & LUCE INC. ENGINEERS

PROJECT ENGINEER

DESIGNED	KBH
DRAFTED	DAS
CHECKED	KBH
DATE	JANUARY 2019

NO.	DATE	REVISIONS	BY	APVD.
3				
2				
1				

SCALE: AS SHOWN

springville PUBLIC WORKS
50 SOUTH MAIN
SPRINGVILLE, UTAH
84663

400 SOUTH WELL-NO. 2 WELL HOUSE
ELECTRICAL
ELECTRICAL DETAILS, SHT. 4

SHEET NO. E7.2
260-44-200

6/01